SELF-CONTAINED CUBER

IM-30CA
IM-45CA
IM-65A
IM-100A
IM-130A
IM-220AA
IM-220AWA

SERVICE MANUAL

M028-857 (121520)

CONTENTS

PAGE

I. SPECIFICATIONS ---------- 1
1. DIMENSIONS/SPECIFICATIONS ---------- 1
[a] IM-220AA (50Hz) ---------- 1
[b] IM-220AA (60Hz) ---------- 2
[c] IM-220AWA (50Hz) ---------- 3
[d] IM-220AWA (60Hz) ---------- 4
[e] IM-100A (50Hz) ---------- 5
[f] IM-100A (60Hz) ---------- 6
[g] IM-130A (50Hz) ---------- 7
[h] IM-130A (60Hz) ---------- 8
[i] IM-65A (50Hz) [Jiaxipera compressor: auxiliary code H0 and earlier] ---------- 9
[j] IM-65A (60Hz) [Jiaxipera compressor: auxiliary code H0 and earlier] ---------- 10
[k] IM-65A (50Hz) [Secop compressor: auxiliary code H1 and later] ---------- 11
[l] IM-65A (60Hz) [Secop compressor: auxiliary code H1 and later] ---------- 12
[m] IM-45CA (50Hz) ---------- 13
[n] IM-45CA (60Hz) ---------- 14
[o] IM-30CA (50Hz) ---------- 15
[p] IM-30CA (60Hz) ---------- 16

II. GENERAL INFORMATION ---------- 17
1. CONSTRUCTION ---------- 17
[a] IM-220AA, IM-220AWA ---------- 17
[b] IM-100A, IM-130A ---------- 20
[c] IM-65A, IM-45CA ---------- 20
[d] IM-30CA ---------- 20

2. CONTROLLER BOARD ---------- 21
[a] CONTROLLER BOARD LAYOUT ---------- 22
[b] INPUT/OUTPUT LAYOUT ---------- 24
[c] BEFORE CHECKING CONTROLLER BOARD ---------- 26

III. OPERATING INSTRUCTIONS ---------- 27
1. START UP ---------- 28
2. PREPARING THE ICEMAKER FOR LONG STORAGE ---------- 28
3. BIN CONTROL ---------- 30
[a] BIN CONTROL SWITCH ASSEMBLY ---------- 30
[b] REMOVAL ---------- 31

IV. MAINTENANCE INSTRUCTIONS ---------- 32
1. PERIODICAL CLEANING ---------- 32
2. WATER VALVE ---------- 34
3. ICEMAKING WATER SYSTEM ---------- 35

V. TECHNICAL INFORMATION---------- 38
1. WATER CIRCUIT AND REFRIGERANT CIRCUIT---------- 38
2. WIRING DIAGRAM ---------- 40
[a] IM-220AA, IM-220AWA ---------- 40
[b] IM-100A---------- 41
[c] IM-130A---------- 42
[d] IM-65A [Jiaxipera compressor: auxiliary code H0 and earlier]---------- 43
[e] IM-65A [Secop compressor: auxiliary code H1 and later]---------- 44
[f] IM-45CA ---------- 45
[g] IM-30CA ---------- 46
3. PERFORMANCE DATA---------- 47

VI. SERVICE DIAGNOSIS ---------- 49
1. ERROR CODE INDICATION ---------- 49
2. NO ERROR CODE INDICATION---------- 50

VII. ADJUSTMENT ---------- 52
1. FULL DRAIN FLUSH ---------- 52
2. DIMPLE DIAMETER---------- 52

VIII. REMOVAL AND REPLACEMENT---------- 53
1. SERVICE FOR REFRIGERANT LINES ---------- 53
[a] SERVICE INFORMATION ---------- 53
[b] REFRIGERANT RECOVERY---------- 54
[c] EVACUATION AND RECHARGE ---------- 55
2. COMPRESSOR---------- 56
3. DRIER ---------- 57
4. EXPANSION VALVE ---------- 58
5. EVAPORATOR ---------- 59
6. HOT GAS VALVE---------- 60
7. WATER PAN ASSEMBLY ---------- 61
8. PUMP MOTOR---------- 64
9. WATER VALVE---------- 64
10. ACTUATOR MOTOR ---------- 65
11. CAM ARM ---------- 65
[a] CAM ARM (A) - ACTUATOR MOTOR SIDE---------- 65
[b] CAM ARM (B) - REAR SIDE ---------- 65
12. CONTROLLER BOARD ---------- 68
13. SWITCHING REGULATOR---------- 71
14. THERMISTOR FOR CUBE CONTROL---------- 72
15. FAN MOTOR ---------- 73
16. CONDENSER ---------- 73
17. WATER REGULATING VALVE - WATER-COOLED MODEL ONLY ---------- 76
[a] VALVE BODY ---------- 76
[b] WHOLE VALVE---------- 76

I. SPECIFICATIONS

1. DIMENSIONS/SPECIFICATIONS

[a] IM-220AA (50Hz)

ITEM	Hoshizaki Cube Ice Maker
MODEL	IM-220AA
POWER SUPPLY	1 Phase 220-240V 50Hz Capacity: Min. 2.4kVA(10.0A)
AMPERAGE	Running: 5.3A Rated Motor: 5.3A Starting: 38A
ELECTRIC CONSUMPTION	Rated Motor: 950W (Power factor: 76%)
ICE PRODUCTION PER 24h	Approx. 190kg(5mm)/220kg(15mm) (AT.10°C, WT.10°C) Approx. 180kg(5mm)/200kg(15mm) (AT.21°C, WT.15°C) Approx. 160kg(5mm)/175kg(15mm) (AT.32°C, WT.21°C)
WATER CONSUMPTION PER 24h	Approx. 0.62m³ (AT.10°C, WT.10°C) Approx. 0.31m³ (AT.21°C, WT.15°C) Approx. 0.27m³ (AT.32°C, WT.21°C)
SHAPE OF ICE	Cube Approx. 28×28×32mm
FREEZE CYCLE TIME	Approx. 23min(5mm) (AT.21°C, WT.15°C)
ICE PRODUCTION PER CYCLE	Approx. 3.2kg/140pcs. (AT.21°C WT.15°C)
DIMENSIONS	560mm(W)×639mm(D)×775mm(H)
EXTERIOR	Stainless Steel
INSULATION	Polyurethane Foam
INSULATION FOAM BLOWING AGENT	N/A
CONNECTIONS – ELECTRIC	X-Type Connection
CONNECTIONS-WATER SUPPLY	Inlet G3/4 (connected at rear side)
CONNECTIONS-DRAIN	Outlet R3/4 (connected at rear side)
ICE MAKING SYSTEM	Cell type
HARVESTING SYSTEM	Hot Gas Defrost
COMPRESSOR	Hermetic
CONDENSER	Air-cooled, Fin and Tube type
HEAT REJECTION	2250W(1936kcal/h) (AT.32°C, WT.21°C)
EVAPORATOR	Tin-plated Copper Tube on Sheet and Cells
REFRIGERANT CONTROL	Thermostatic Expansion Valve
REFRIGERANT CHARGE	R404A/500g
ICE MAKING CONTROL SYSTEM	Thermistor, Timer
HARVESTING CONTROL SYSTEM	Thermistor
BIN CONTROL SYSTEM	Microswitch with Time Delay
ICE MAKING WATER CONTROL SYSTEM	Timer, Water Pan's movement
ELECTRICAL PROTECTION	Class I Appliance, 5A Fuse
COMPRESSOR PROTECTION	Auto-reset Overload Protector (Internal)
ICE MAKER PROTECTION	Interlock by Controller Board
WEIGHT	Net weight 69kg/Gross weight 76kg
PACKAGE	Carton 644mm(W)×728mm(D)×878mm(H)
ACCESSORIES	Installation Kit
OPERATING CONDITIONS	Ambient Temp.: 1 – 40°C, Water Supply Temp.: 5–35°C Water Supply Pressure: 0.7–7.8bar(0.07–0.78MPa),Voltage Range: Rated Voltage±6%

1. Install the product properly in accordance with the instructions on location, water supply/drain connections and electrical connections stated in the instruction and installation manuals provided. Allow 10mm extra space at the installation site to meet any installation requirements (additional spacing is also required for proper air flow and pipe connections).
2. The ice production depends on the ambient and water temperatures. Refer to the instruction manual.
3. Product Code: M028,M028-C101.

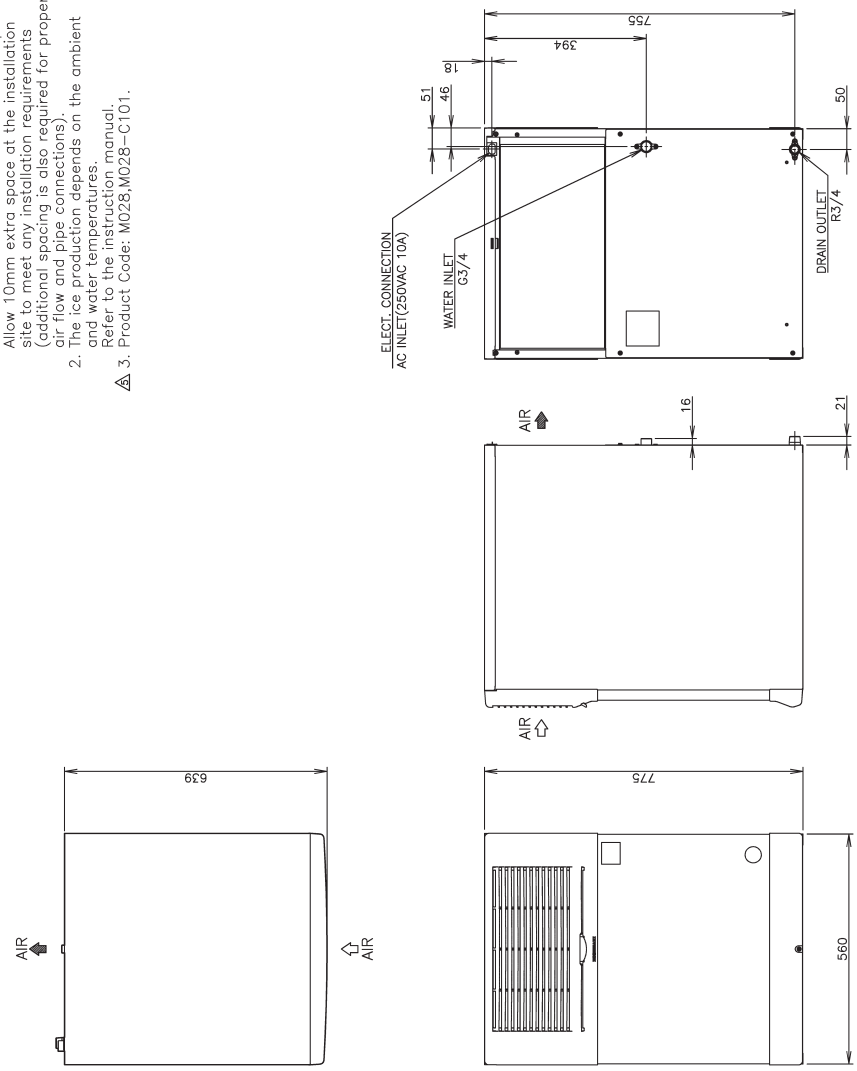

[b] IM-220AA (60Hz)

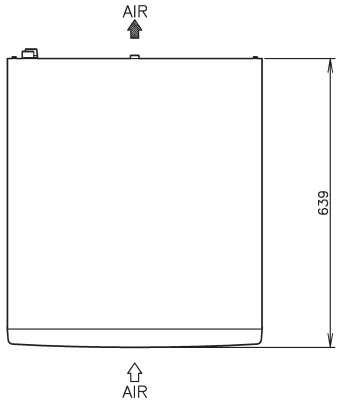

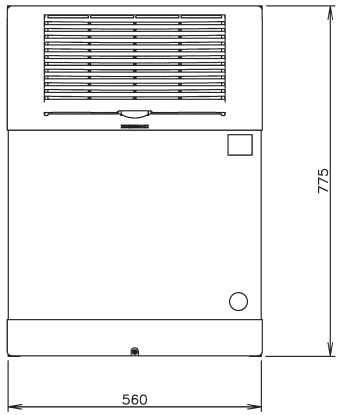

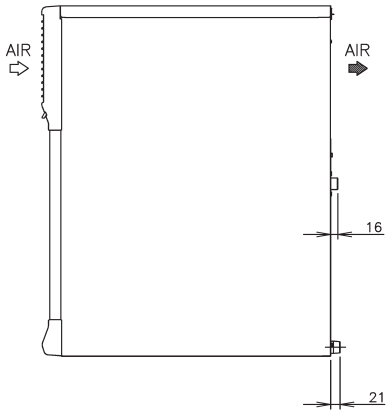

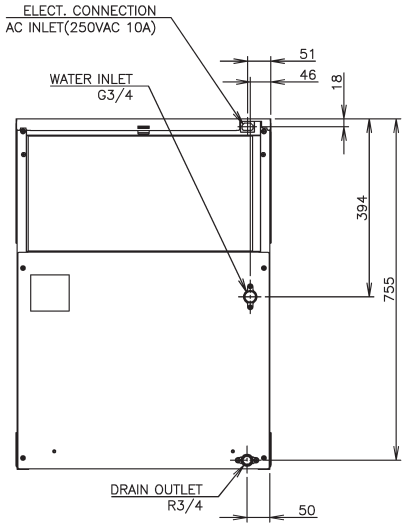

OPERATING CONDITIONS	Ambient Temp.: 1 – 40°C, Water Supply Temp.: 5–35°C Water Supply Pressure: 0.07–0.78MPa(0.7–8bar) Voltage Range: Rated Voltage±6%

※We reserve the right to make changes in specifications and design without prior notice.

1. Install the product properly in accordance with the instructions on location, water supply/drain connections and electrical connections stated in the instruction and installation manuals provided. Allow 10mm extra space at the installation site to meet any installation requirements (additional spacing is also required for proper air flow and pipe connections).
2. The ice production depends on the ambient and water temperatures. Refer to the instruction manual.
3. Product Code: M028–C151
   M028–C161

ITEM	Hoshizaki Cube Ice Maker	
MODEL	IM–220AA	
POWER SUPPLY	1 PHASE 230V 60Hz Capacity: Min. 1.90kVA (8.3A)	
AMPERAGE	Running: 4.8A Rated Motor: 4.8A Starting: 36.5A	
ELECTRIC CONSUMPTION	Rated Motor: 1068W (Power factor: 98%)	
ICE PRODUCTION PER 24h	Approx. 200kg(5mm)/230kg(15mm) (AT.10°C, WT.10°C) Approx. 190kg(5mm)/210kg(15mm) (AT.21°C, WT.15°C) Approx. 160kg(5mm)/180kg(15mm) (AT.32°C, WT.21°C)	
WATER CONSUMPTION PER 24h	Approx. 0.26m³(5mm)/0.62m³(15mm)(AT.10°C, WT.10°C) Approx. 0.25m³(5mm)/0.27m³(15mm)(AT.21°C, WT.15°C) Approx. 0.21m³(5mm)/0.23m³(15mm)(AT.32°C, WT.21°C)	
SHAPE OF ICE	Cube Approx. 28× 28× 32mm	
FREEZE CYCLE TIME	Approx. 23min(5mm) (AT.21°C, WT.15°C)	
ICE PRODUCTION PER CYCLE	Approx. 3.2kg/140.pcs.(5mm) (AT.21°C, WT.15°C)	
DIMENSIONS	580mm(W)× 639mm(D)× 775mm(H)	
EXTERIOR	Stainless Steel	
INSULATION	Polyurethane Foam	
INSULATION FOAM BLOWING AGENT	N/A	
CONNECTIONS –ELECTRIC	X–Type Connection	
CONNECTIONS –WATER SUPPLY	Inlet G3/4 (connected at rear side)	
CONNECTIONS–DRAIN	Outlet R3/4 (connected at rear side)	
ICE MAKING SYSTEM	Cell type	
HARVESTING SYSTEM	Hot Gas Defrost	
COMPRESSOR	Hermetic	
CONDENSER	Air–cooled	
HEAT REJECTION	2090W(1802kcal/h) (AT.32°C, WT.21°C)	
EVAPORATOR	Tin–plated Copper Tube on Sheet and Cells	
REFRIGERANT CONTROL	Thermostatic Expansion Valve	
REFRIGERANT CHARGE	R404A/450g	
ICE MAKING CONTROL SYSTEM	Thermistor, Timer	Controller Board
HARVESTING CONTROL SYSTEM	Thermistor	
BIN CONTROL SYSTEM	Microswitch with Time Delay	
ICE MAKING WATER CONTROL SYSTEM	Timer, Water Pan's movement	
ELECTRICAL PROTECTION	Class I Appliance, 5A Fuse	
COMPRESSOR PROTECTION	Auto–reset Overload Protector (Internal)	
ICE MAKER PROTECTION	Interlock by Controller Board	
WEIGHT	Net weight 69kg/Gross weight 76kg	
PACKAGE	Carton 644mm(W)× 728mm(D)× 883mm(H)	
ACCESSORIES	Installation Kit	

[c] IM-220AWA (50Hz)

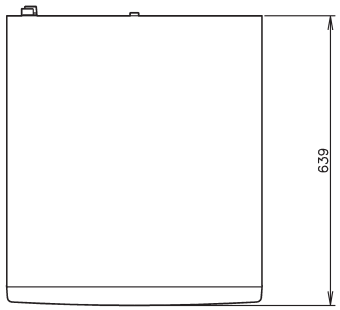

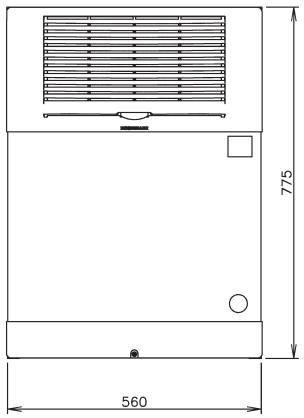

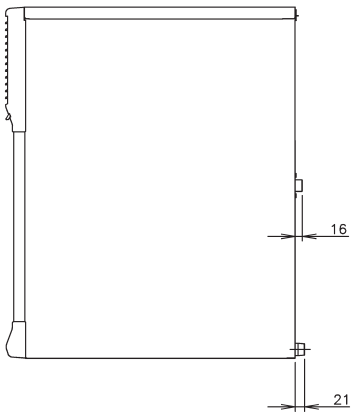

1. Install the product properly in accordance with the instructions on location, water supply/drain connections and electrical connections stated in the instruction and installation manuals provided. Allow 10mm extra space at the installation site to meet any installation requirements (additional spacing is also required for proper air flow and pipe connections).
2. The ice production depends on the ambient and water temperatures. Refer to the instruction manual.
3. Product Code: M028–C201

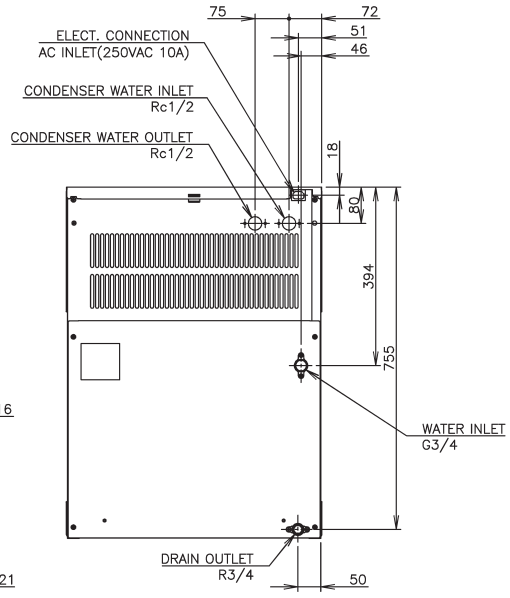

ITEM	Hoshizaki Cube Ice Maker	
MODEL	IM–220AWA	
POWER SUPPLY	1 Phase 220–240V 50Hz Capacity: Min. 2.5kVA(10.4A)	
AMPERAGE	Running: 4.8A Rated Motor: 4.8A Starting: 37.5A	
ELECTRIC CONSUMPTION	Rated Motor: 870W (Power factor: 76%)	
ICE PRODUCTION PER 24h	Approx. 200kg(5mm)/220kg(15mm) (AT.10°C, WT.10°C) Approx. 185kg(5mm)/195kg(15mm) (AT.21°C, WT.15°C) Approx. 160kg(5mm)/175kg(15mm) (AT.32°C, WT.21°C)	
POTABLE WATER CONSUMPTION PER 24h	Approx. 0.26m³(5mm)/0.28m³(15mm) (AT.10°C, WT.10°C) Approx. 0.24m³(5mm)/0.25m³(15mm)(AT.21°C, WT.15°C) Approx. 0.21m³(5mm)/0.23m³(15mm)(AT.32°C, WT.21°C)	
CONDENSER WATER CONSUMPTION PER 24h	Approx. 0.76m³(5mm)/0.74m³(15mm) (AT.10°C, WT.10°C) Approx. 0.93m³(5mm)/0.96m³(15mm)(AT.21°C, WT.15°C) Approx. 1.22m³(5mm)/1.18m³(15mm)(AT.32°C, WT.21°C)	
SHAPE OF ICE	Cube Approx. 28× 28× 32mm	
FREEZE CYCLE TIME	Approx. 22.5min (5mm) (AT.21°C, WT.15°C)	
ICE PRODUCTION PER CYCLE	Approx. 3.2kg/140pcs. (AT.21°C, WT.15°C)	
DIMENSIONS	560mm(W)× 639mm(D)× 775mm(H)	
EXTERIOR	Stainless Steel	
INSULATION	Polyurethane Foam	
INSULATION FOAM BLOWING AGENT	N/A	
CONNECTIONS – ELECTRIC	X–Type Connection	
CONNECTIONS–WATER SUPPLY	Inlet G3/4 Cond. Inlet Rc1/2 (connected at rear side)	
CONNECTIONS–DRAIN	Outlet R3/4 Cond. Outlet Rc1/2(connected at rear side)	
ICE MAKING SYSTEM	Cell type	
HARVESTING SYSTEM	Hot Gas Defrost	
COMPRESSOR	Hermetic	
CONDENSER	Water–cooled	
EVAPORATOR	Electroless Nickel Plated Copper Tube on Sheet and Cells	
REFRIGERANT CONTROL	Thermostatic Expansion Valve	
REFRIGERANT CHARGE	R404A/400g	
ICE MAKING CONTROL SYSTEM	Thermistor, Timer	Controller Board
HARVESTING CONTROL SYSTEM	Thermistor	
BIN CONTROL SYSTEM	Microswitch with Time Delay	
ICE MAKING WATER CONTROL SYSTEM	Timer, Water Pan's movement	
ELECTRICAL PROTECTION	Class I Appliance, 5A Fuse	
COMPRESSOR PROTECTION	Auto–reset Overload Protector (Internal)	
ICE MAKER PROTECTION	Interlock by Controller Board	
WEIGHT	Net weight 69kg/Gross weight 76kg	
△3 PACKAGE	Carton 644mm(W)× 728mm(D)× 878mm(H)	
ACCESSORIES	Installation Kit	
OPERATING CONDITIONS	Ambient Temp.: 1 – 40°C, Water Supply Temp.: 5–35°C Water Supply Pressure: 0.7–7.8bar(0.07–0.78MPa),Voltage Range: Rated Voltage±6%	

* We reserve the right to make changes in specifications and design without prior notice.

[d] IM-220AWA (60Hz)

OPERATING CONDITIONS	Ambient Temp.: 1 – 40°C Water Supply Temp.: 5–35°C Water Supply Pressure: 0.7–7.8bar(0.07–0.78MPa) Voltage Range: Rated Voltage±6%

*We reserve the right to make changes in specifications and design without prior notice.

1. Install the product properly in accordance with the instructions on location, water supply/drain connections and electrical connections stated in the instruction and installation manuals provided. Allow 10mm extra space at the installation site to meet any installation requirements (additional spacing is also required for proper air flow and pipe connections).
2. The ice production depends on the ambient and water temperatures. Refer to the instruction manual.
3. Product Code: M028–C251

*Custom specification
For Taiwan
Water cooling

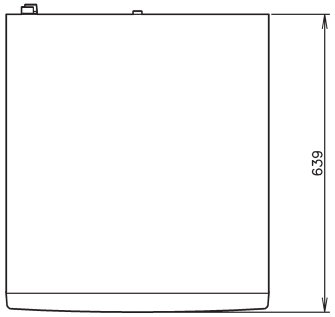

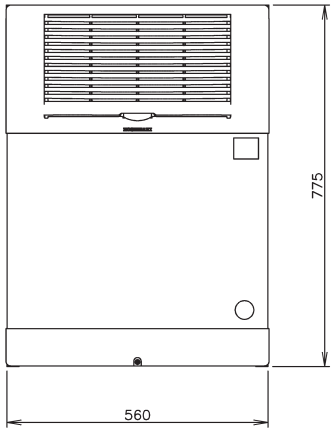

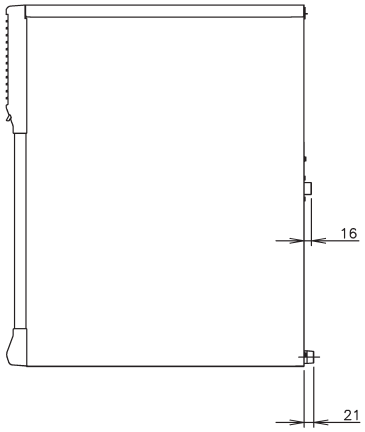

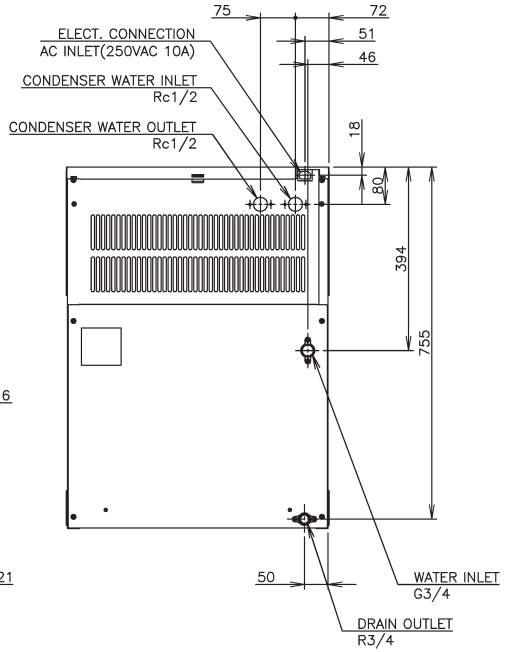

	ITEM		
	MODEL	IM–220AWA	
	POWER SUPPLY	1 Phase 230V 60Hz Capacity: Min. 2.4kVA(11.0A)	
	AMPERAGE	Running: 3.9A Rated Motor: 3.9A Starting: 37.5A	
	ELECTRIC CONSUMPTION	Rated Motor: 895W (Power factor: 99%)	
	ICE PRODUCTION PER 24h	Approx. 195kg(5mm) / 210kg(15mm) (AT.10°C WT.10°C) Approx. 185kg(5mm) / 200kg(15mm) (AT.21°C WT.15°C) Approx. 175kg(5mm) / 195kg(15mm) (AT.32°C WT.21°C)	
	POTABLE WATER CONSUMPTION PER 24h	Approx. 0.35m³(5mm) / 0.75m³(15mm) (AT.10°C WT.10°C) Approx. 0.33m³(5mm) / 0.37m³(15mm) (AT.21°C WT.15°C) Approx. 0.27m³(5mm) / 0.31m³(15mm) (AT.32°C WT.21°C)	
	CONDENSER WATER CONSUMPTION PER 24h	Approx. 0.82m³(5mm) / 0.87m³(15mm) (AT.10°C WT.10°C) Approx. 1.01m³(5mm) / 1.09m³(15mm) (AT.21°C WT.15°C) Approx. 1.39m³(5mm) / 1.45m³(15mm) (AT.32°C WT.21°C)	
	SHAPE OF ICE	Cube Approx. 28 x 28 x 32mm	
⚠1	FREEZE CYCLE TIME	Approx. 22.5min(5mm) (AT.21°C WT.15°C)	
	ICE PRODUCTION PER CYCLE	Approx. 3.2kg/140pcs. (AT.21°C WT.15°C)	
	DIMENSIONS	560mm(W) x 639mm(D) x 775mm(H)	
	EXTERIOR	Stainless Steel	
	INSULATION	Polyurethane Foam	
⚠1	INSULATION FOAM BLOWING AGENT	N/A	
	CONNECTIONS – ELECTRIC	X–Type Connection	
	CONNECTIONS – WATER SUPPLY	Inlet G3/4 Cond. Inlet Rc1/2 (connected at rear side)	
	CONNECTIONS–DRAIN	Outlet R3/4 Cond. Outlet Rc1/2(connected at rear side)	
	ICE MAKING SYSTEM	Cell type	
	HARVESTING SYSTEM	Hot Gas Defrost	
	COMPRESSOR	Hermetic	
	CONDENSER	Water–cooled	
	EVAPORATOR	Electroless Nickel Plated Copper Tube on Sheet and Cells	
	REFRIGERANT CONTROL	Thermostatic Expansion Valve	
	REFRIGERANT CHARGE	R404A/400g	
	ICE MAKING CONTROL SYSTEM	Thermistor, Timer	Controller Board
	HARVESTING CONTROL SYSTEM	Thermistor	Controller Board
	BIN CONTROL SYSTEM	Microswitch with Time Delay	Controller Board
	ICE MAKING WATER CONTROL SYSTEM	Timer, Water Pan's movement	Controller Board
	ELECTRICAL PROTECTION	Class I Appliance, 5A Fuse	
	COMPRESSOR PROTECTION	Auto–reset Overload Protector (Internal)	
	ICE MAKER PROTECTION	Interlock by Controller Board	
	WEIGHT	Net weight 69kg/Gross weight 76kg	
	PACKAGE	Carton 644mm(W) x 728mm(D) x 883mm(H)	
	ACCESSORIES	Installation Kit	

[e] IM-100A (50Hz)

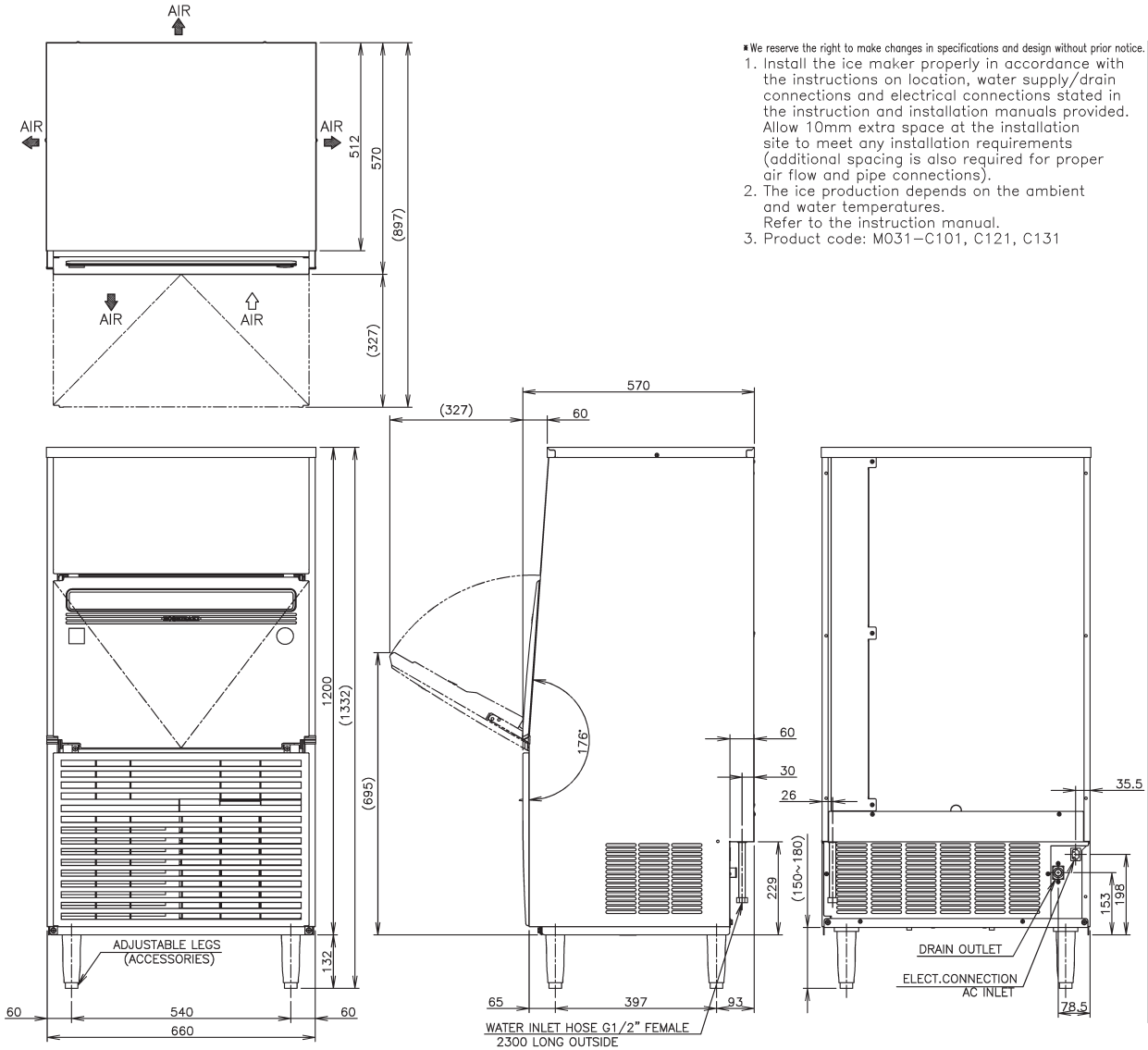

*We reserve the right to make changes in specifications and design without prior notice.

1. Install the ice maker properly in accordance with the instructions on location, water supply/drain connections and electrical connections stated in the instruction and installation manuals provided. Allow 10mm extra space at the installation site to meet any installation requirements (additional spacing is also required for proper air flow and pipe connections).
2. The ice production depends on the ambient and water temperatures. Refer to the instruction manual.
3. Product code: M031–C101, C121, C131

ITEM	Hoshizaki Cube Ice Maker	
MODEL	IM–100A	
POWER SUPPLY	1 PHASE 220–240V 50Hz Capacity: Min. 1.53kVA (6.4A)	
AMPERAGE	Running: 4.8A Rated Motor: 4.8A Starting: 18.4A	
ELECTRIC CONSUMPTION	Rated Motor: 680W (Power factor: 59%)	
ICE PRODUCTION PER 24h	Approx. 100kg (5mm) /112kg (15mm) (AT.10°C, WT.10°C) Approx. 98kg (5mm) / 108kg (15mm) (AT.21°C, WT.15°C) Approx. 81kg (5mm) / 88kg (15mm) (AT32°C, WT.21°C)	
WATER CONSUMPTION PER 24h	Approx. 0.41m³(5mm)(AT.10°C, WT.10°C) Approx. 0.21m³(5mm) (AT.21°C, WT.15°C) Approx. 0.17m³(5mm) (AT32°C, WT.21°C)	
SHAPE OF ICE	Cube Approx. 28× 28× 32mm	
FREEZE CYCLE TIME	Approx. 28min (5mm) (AT.21°C, WT.15°C)	
ICE PRODUCTION PER CYCLE	1.8kg/80pcs.(5mm) (AT.21°C, WT.15°C)	
MAX STORAGE CAPACITY	52kg(Bin Control Setting Approx. 34kg)	
DIMENSIONS	660mm(W) × 570mm(D) × 1200mm(H)	
EXTERIOR	Stainless Steel, Plastic Door & Louver, Galvanized Steel(Rear)	
INSULATION	Polyurethane Foam	
INSULATION FOAM BLOWING AGENT	Cyclopentane	
CONNECTIONS –ELECTRIC	X–Type Connection	
CONNECTIONS –WATER SUPPLY	Inlet G1/2" (connected at rear side)	
CONNECTIONS–DRAIN	Outlet I.D. ϕ22mm (connected at rear side)	
ICE MAKING SYSTEM	Cell type	
HARVESTING SYSTEM	Hot Gas Defrost	
COMPRESSOR	Hermetic	
CONDENSER	Air–cooled	
HEAT REJECTION	1335W 1150kcal/h	
EVAPORATOR	Tin–plated Copper Tube on Sheet and Cells	
REFRIGERANT CONTROL	Thermostatic Expansion Valve	
REFRIGERANT CHARGE	R404A / 400g	
ICE MAKING CONTROL SYSTEM	Thermistor, Timer	Controller Board ⚠5
HARVESTING CONTROL SYSTEM	Thermistor	
BIN CONTROL SYSTEM	Microswitch with Time Delay	
ICE MAKING WATER CONTROL SYSTEM	Timer, Water Pan's movement	
ELECTRICAL PROTECTION	Class I Appliance, 5A Fuse	
COMPRESSOR PROTECTION	Auto–reset Overload Protector	
ICE MAKER PROTECTION	Interlock by Controller Board	
WEIGHT	Net weight 76kg/Gross weight 95kg	
PACKAGE	Carton 760mm(W) × 680mm(D) × 1379mm(H)	
ACCESSORIES	Scoop, Leg, Installation Kit	
OPERATING CONDITIONS	Ambient Temp.:1–40°C, Water Supply Temp.:5–35°C Water Supply Pressure:0.07–0.78MPa(0.7–8bar) Voltage Range: Rated Voltage±6%	

[f] IM-100A (60Hz)

OPERATING CONDITIONS	Ambient Temp.:1~40°C, Water Supply Temp.:5~35°C Water Supply Pressure:0.07~0.78MPa(0.7~8bar) Voltage Range: Rated Voltage±6%

※We reserve the right to make changes in specifications and design without prior notice.

1. Install the ice maker properly in accordance with the instructions on location, water supply/drain connections and electrical connections stated in the instruction and installation manuals provided. Allow 10mm extra space at the installation site to meet any installation requirements (additional spacing is also required for proper air flow and pipe connections).
2. The ice production depends on the ambient and water temperatures. Refer to the instruction manual.
3. Product code: M031-C151
   M031-C161

ITEM	Hoshizaki Cube Ice Maker
MODEL	IM-100A
AC SUPPLY VOLTAGE	1 PHASE 230V 60Hz
AMPERAGE	3.7A (AT.32°C, WT.21°C)
STARTING AMPERAGE	18.4A
ELECTRIC CONSUMPTION	680W (AT.32°C, WT.21°C)
POWER FACTOR	80%
POWER SUPPLY CAPACITY	Min. 1.15kVA (5.0A)
ICE PRODUCTION PER 24h	Approx. 105kg (5mm) /113kg (15mm)(AT.10°C WT.10°C) Approx. 100kg (5mm) /110kg (15mm)(AT.21°C WT.15°C) Approx. 86kg (5mm) / 95kg (15mm) (AT32°C, WT.21°C)
WATER CONSUMPTION PER 24h	Approx. 0.51m³(5mm)/0.54m³(15mm)(AT.10°C, WT.10°C) Approx. 0.47m³(5mm)/0.25m³(15mm) (AT.21°C, WT.15°C) Approx. 0.20m³(5mm)/0.22m³(15mm) (AT32°C, WT.21°C)
SHAPE OF ICE	Cube Approx. 28×28×32mm
FREEZE CYCLE TIME	Approx. 23min (5mm) (AT.21°C, WT.15°C)
ICE PRODUCTION PER CYCLE	1.8kg/80pcs.(5mm) (AT.21°C, WT.15°C)
MAX STORAGE CAPACITY	52kg(Bin Control Setting Approx. 34kg)
DIMENSIONS	660mm(W) × 570mm(D) × 1200mm(H)
EXTERIOR	Stainless Steel, Plastic Door & Louver, Galvanized Steel(Rear)
INSULATION	Polyurethane Foam
INSULATION FOAM BLOWING AGENT	Cyclopentane
CONNECTIONS -ELECTRIC	X-Type Connection
CONNECTIONS -WATER SUPPLY	Inlet G1/2" (connected at rear side)
CONNECTIONS-DRAIN	Outlet I.D. ϕ22mm (connected at rear side)
ICE MAKING SYSTEM	Cell type
HARVESTING SYSTEM	Hot Gas Defrost
COMPRESSOR	Hermetic
CONDENSER	Air-cooled
HEAT REJECTION	1360W 1172kcal/h
EVAPORATOR	Tin-plated Copper Tube on Sheet and Cells
REFRIGERANT CONTROL	Thermostatic Expansion Valve
REFRIGERANT CHARGE	R404A / 400g
ICE MAKING CONTROL SYSTEM	Thermistor, Timer (Controller)
HARVESTING CONTROL SYSTEM	Thermistor (Controller)
BIN CONTROL SYSTEM	Microswitch with Time Delay (Board)
ICE MAKING WATER CONTROL SYSTEM	Timer, Water Pan's movement (Board)
ELECTRICAL PROTECTION	Class I Appliance, 5A Fuse
COMPRESSOR PROTECTION	Auto-reset Overload Protector
ICE MAKER PROTECTION	Interlock by Controller Board
WEIGHT	Net weight 76kg/Gross weight 95kg
PACKAGE	Carton 760mm(W) × 680mm(D) × 1379mm(H)
ACCESSORIES	Scoop, Leg, Installation Kit

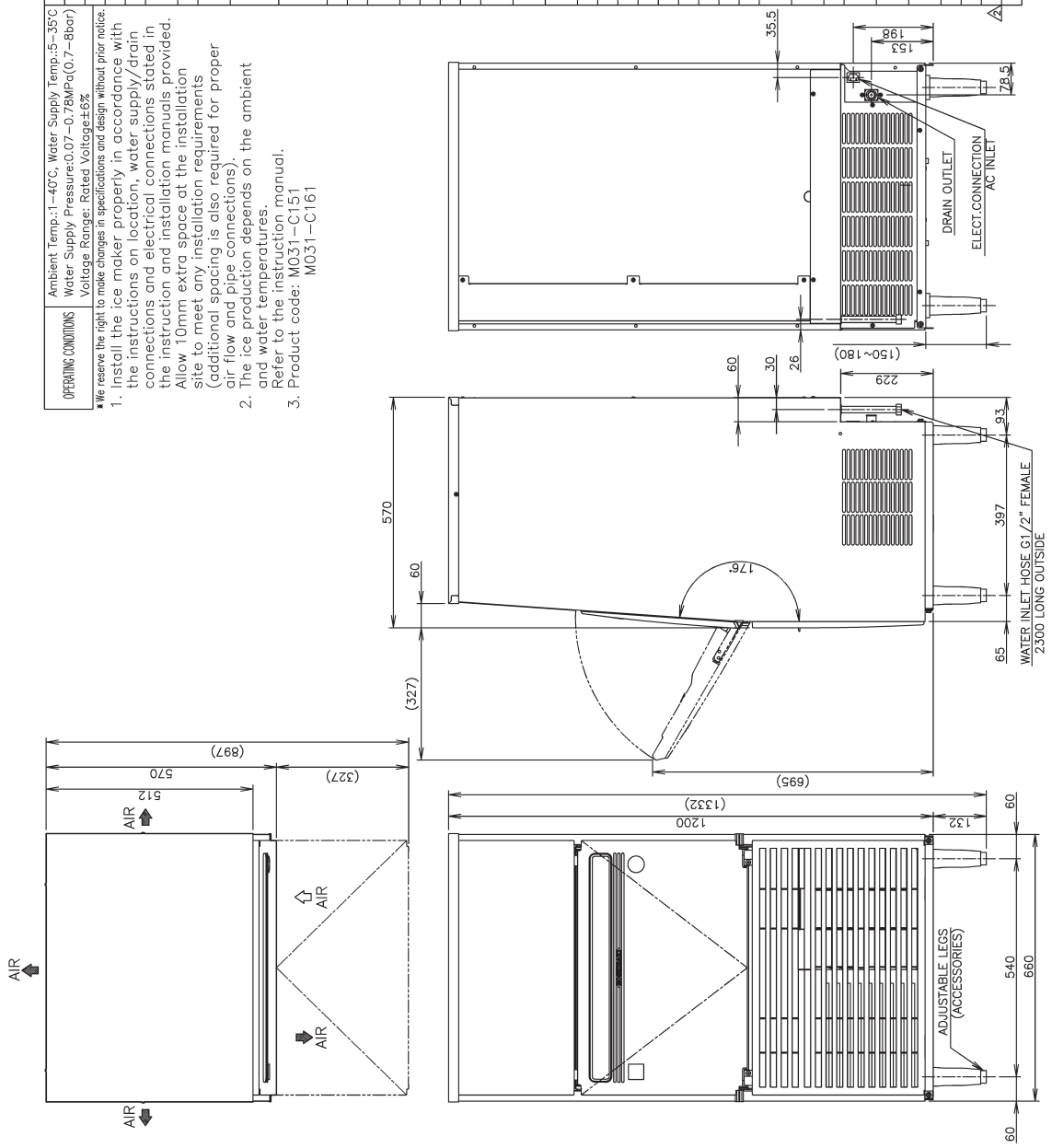

[g] IM-130A (50Hz)

ITEM	Hoshizaki Cube Ice Maker
MODEL	IM-130A
AC SUPPLY VOLTAGE	1 PHASE 220-240V 50Hz
AMPERAGE	2.7A (AT.32°C, WT.21°C)
STARTING AMPERAGE	25A
ELECTRIC CONSUMPTION	630W (AT.32°C, WT.21°C)
POWER FACTOR	97%
POWER SUPPLY CAPACITY	Min. 1.64kVA (6.9A)
ICE PRODUCTION PER 24h	Approx. 120kg (5mm) / 126kg (15mm)(AT.10°C, WT.10°C) Approx. 116kg (5mm) / 125kg (15mm)(AT.21°C, WT.15°C) Approx. 90kg (5mm) / 100kg (15mm)(AT32°C, WT.21°C)
WATER CONSUMPTION PER 24h	Approx. 0.50m³(5mm) (AT.10°C, WT.10°C) Approx. 0.25m³(5mm) (AT.21°C, WT.15°C) Approx. 0.19m³(5mm) (AT32°C, WT.21°C)
SHAPE OF ICE	Cube Approx. 28× 28× 32mm
FREEZE CYCLE TIME	23min (5mm) (AT.21°C, WT.15°C)
ICE PRODUCTION PER CYCLE	1.8kg/80pcs.(5mm)(AT.21°C, WT.15°C)
MAX STORAGE CAPACITY	52kg(Bin Control Setting Approx. 34kg)
DIMENSIONS	660mm(W) × 570mm(D) × 1200mm(H)
EXTERIOR	Stainless Steel, Plastic Door & Louver, Galvanized Steel(Rear)
INSULATION	Polyurethane Foam
INSULATION FOAM BLOWING AGENT	Cyclopentane
CONNECTING-ELECTRIC	X-Type Connection
CONNECTING-WATER SUPPLY	Inlet G1/2" (connected at rear side)
CONNECTIONS-DRAIN	Outlet I.D. ϕ22mm (connected at rear side)
ICE MAKING SYSTEM	Cell type
HARVESTING SYSTEM	Hot Gas Defrost
COMPRESSOR	Hermetic
CONDENSER	Air-cooled
HEAT REJECTION	1410W 1213kcal/h
EVAPORATOR	Tin-plated Copper Tube on Sheet and Cells
REFRIGERANT CONTROL	Thermostatic Expansion Valve
REFRIGERANT CHARGE	R404A / 350g
ICE MAKING CONTROL SYSTEM	Thermistor, Timer (Controller Board)
HARVESTING CONTROL SYSTEM	Thermistor (Controller Board)
BIN CONTROL SYSTEM	Microswitch with Time Delay (Controller Board)
ICE MAKING WATER DRAIN SYSTEM	Timer, Water Pan's movement
ELECTRICAL PROTECTION	Class I Appliance, 5A Fuse
COMPRESSOR PROTECTION	Auto-reset Overload Protector
ICE MAKER PROTECTION	Interlock by Controller Board
WEIGHT	Net weight 79kg/Gross weight 98kg
PACKAGE	Carton 760mm(W) × 680mm(D) × 1379mm(H)
ACCESSORIES	Scoop, Leg, Installation Kit
OPERATING CONDITIONS	Ambient Temp.:1-40°C,Water Supply Temp.:5-35°C Water Supply Pressure:0.07-0.78MPa(0.7-8bar) Voltage Range: Rated Voltage±6%

■ We reserve the right to make changes in specifications and design without prior notice.

1. Install the ice maker properly in accordance with the instructions on location, water supply/drain connections and electrical connections stated in the instruction and installation manuals provided. Allow 10mm extra space at the installation site to meet any installation requirements (additional spacing is also required for proper air flow and pipe connections).
2. The ice production depends on the ambient and water temperatures. Refer to the instruction manual.
3. Product code: M032-C101, C121

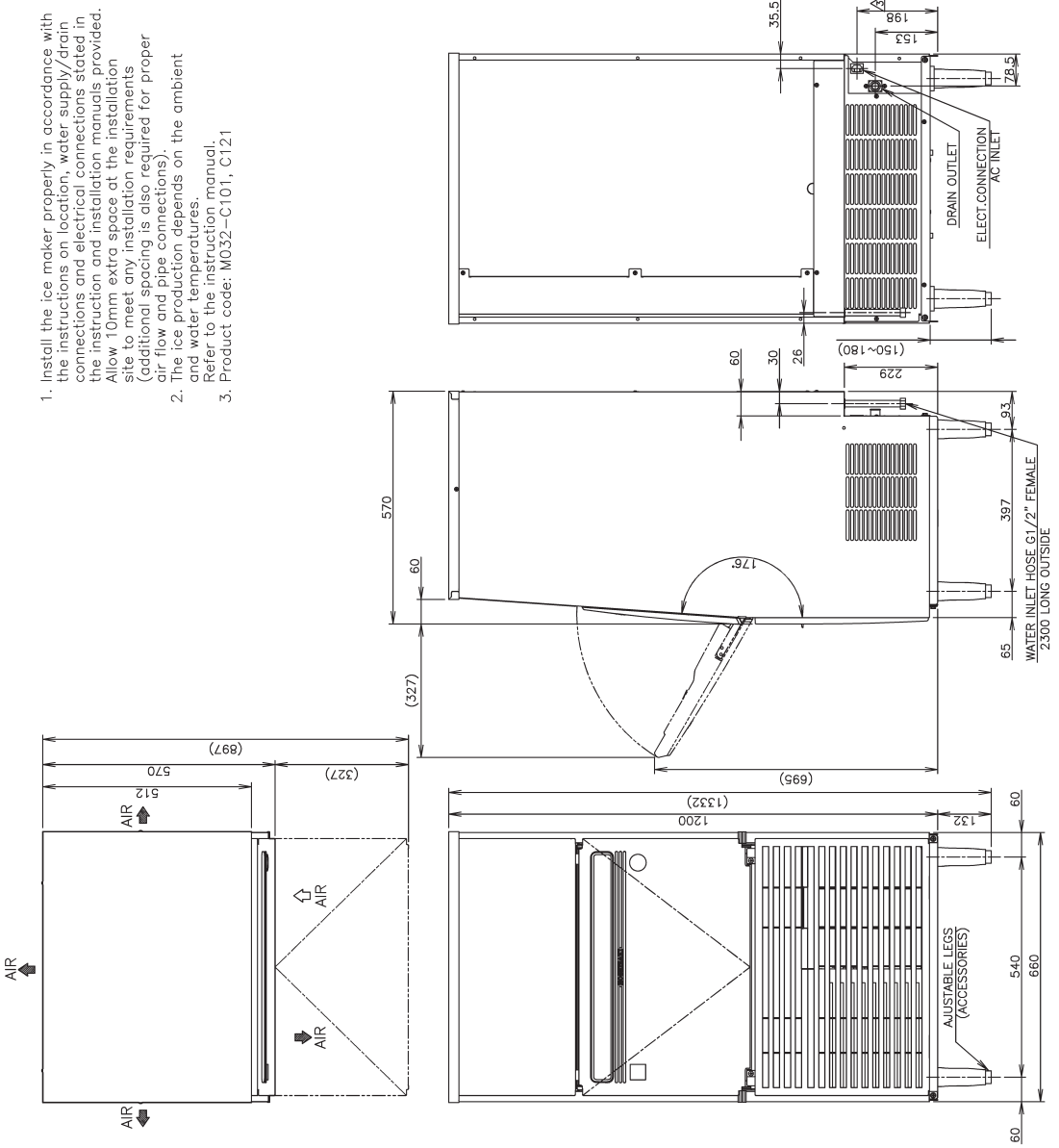

[h] IM-130A (60Hz)

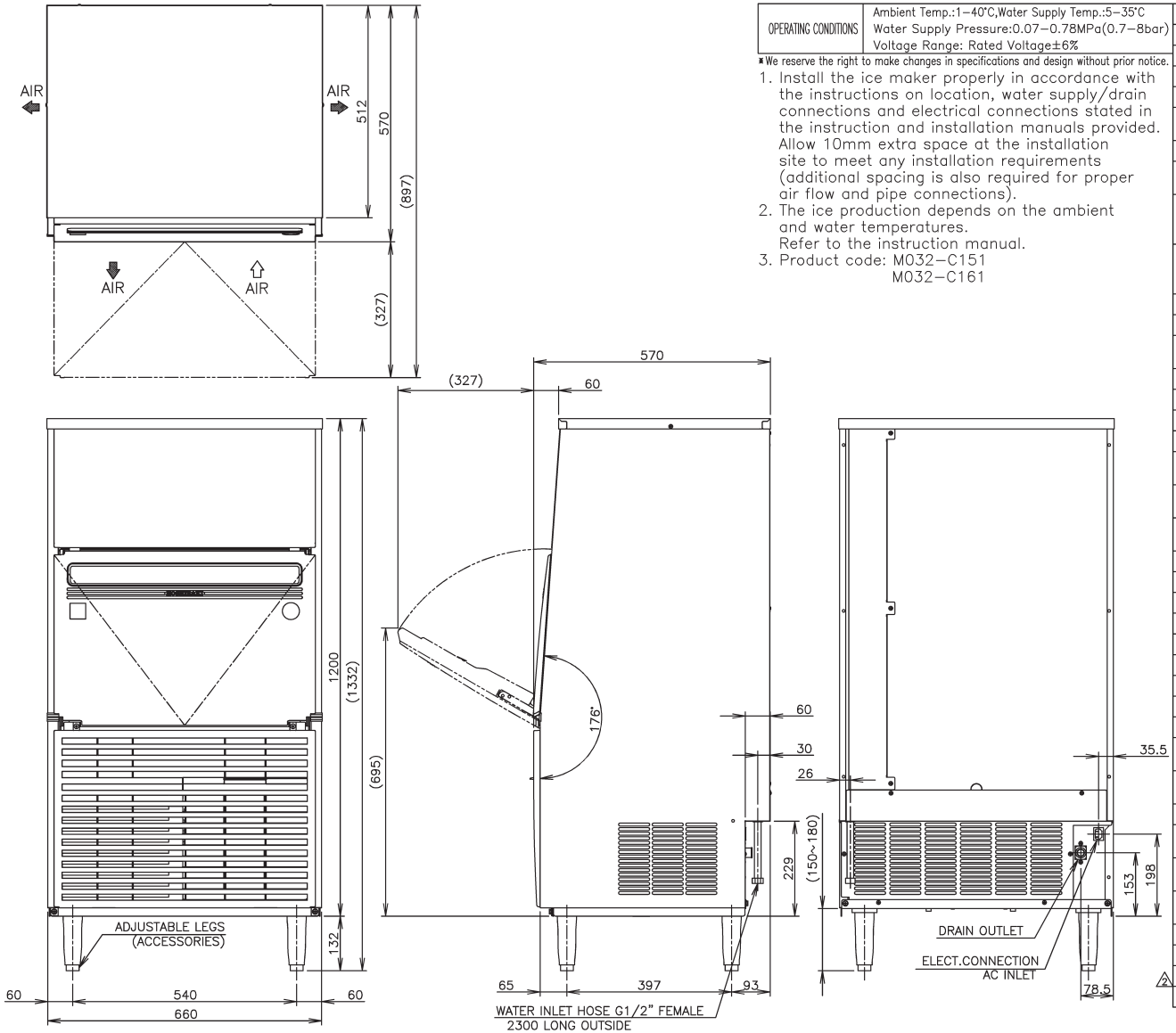

OPERATING CONDITIONS	Ambient Temp.:1–40°C,Water Supply Temp.:5–35°C Water Supply Pressure:0.07–0.78MPa(0.7–8bar) Voltage Range: Rated Voltage±6%

*We reserve the right to make changes in specifications and design without prior notice.

1. Install the ice maker properly in accordance with the instructions on location, water supply/drain connections and electrical connections stated in the instruction and installation manuals provided. Allow 10mm extra space at the installation site to meet any installation requirements (additional spacing is also required for proper air flow and pipe connections).
2. The ice production depends on the ambient and water temperatures. Refer to the instruction manual.
3. Product code: M032–C151
   M032–C161

ITEM	Hoshizaki Cube Ice Maker	
MODEL	IM–130A	
AC SUPPLY VOLTAGE	1 PHASE 230V 60Hz	
AMPERAGE	5.9A (AT.32°C, WT.21°C)	
STARTING AMPERAGE	30A	
ELECTRIC CONSUMPTION	820W (AT.32°C, WT.21°C)	
POWER FACTOR	60%	
POWER SUPPLY CAPACITY	Min. 1.88kVA (8.2A)	
ICE PRODUCTION PER 24h	Approx. 120kg (5mm) /130kg (15mm)(AT.10°C, WT.10°C) Approx. 116kg (5mm) /126kg (15mm)(AT.21°C, WT.15°C) Approx. 95kg (5mm) / 108kg (15mm)(AT.32°C, WT.21°C)	
WATER CONSUMPTION PER 24h	Approx. 0.57m³(5mm)/0.62m³(15mm)(AT.10°C, WT.10°C) Approx. 0.27m³(5mm)/0.29m³(15mm)(AT.21°C, WT.15°C) Approx. 0.22m³(5mm)/0.25m³(15mm)(AT.32°C, WT.21°C)	
SHAPE OF ICE	Cube Approx. 28×28×32mm	
FREEZE CYCLE TIME	Approx. 20.5min (5mm) (AT.21°C, WT.15°C)	
ICE PRODUCTION PER CYCLE	1.8kg/140pcs.(5mm)(AT.21°C, WT.15°C)	
MAX STORAGE CAPACITY	52kg(Bin Control Setting Approx. 34kg)	
DIMENSIONS	660mm(W) × 570mm(D) × 1200mm(H)	
EXTERIOR	Stainless Steel, Plastic Door & Louver, Galvanized Steel(Rear)	
INSULATION	Polyurethane Foam	
INSULATION FOAM BLOWING AGENT	Cyclopentane	
CONNECTIONS –ELECTRIC	X–Type Con.	
CONNECTIONS –WATER SUPPLY	Inlet G1/2" (connected at rear side)	
CONNECTIONS–DRAIN	Outlet I.D. ϕ22mm (connected at rear side)	
ICE MAKING SYSTEM	Cell type	
HARVESTING SYSTEM	Hot Gas Defrost	
COMPRESSOR	Hermetic	
CONDENSER	Air–cooled	
HEAT REJECTION	1860W 1603(kcal/h)	
EVAPORATOR	Tin–plated Copper Tube on Sheet and Cells	
REFRIGERANT CONTROL	Thermostatic Expansion Valve	
REFRIGERANT CHARGE	R404A / 320g	
ICE MAKING CONTROL SYSTEM	Thermistor, Timer	Controller Board
HARVESTING CONTROL SYSTEM	Thermistor	Controller Board
BIN CONTROL SYSTEM	Microswitch with Time Delay	Controller Board
ICE MAKING WATER CONTROL SYSTEM	Timer, Water Pan's movement	Controller Board
ELECTRICAL PROTECTION	Class I Appliance, 5A Fuse	
COMPRESSOR PROTECTION	Auto–reset Overload Protector	
ICE MAKER PROTECTION	Interlock by Controller Board	
WEIGHT	Net weight 79kg/Gross weight 98kg	
PACKAGE	Carton 760mm(W) × 680mm(D) × 1379mm(H)	
ACCESSORIES	Scoop, Leg, Installation Kit	

[i] IM-65A (50Hz) [Jiaxipera compressor: auxiliary code H0 and earlier]

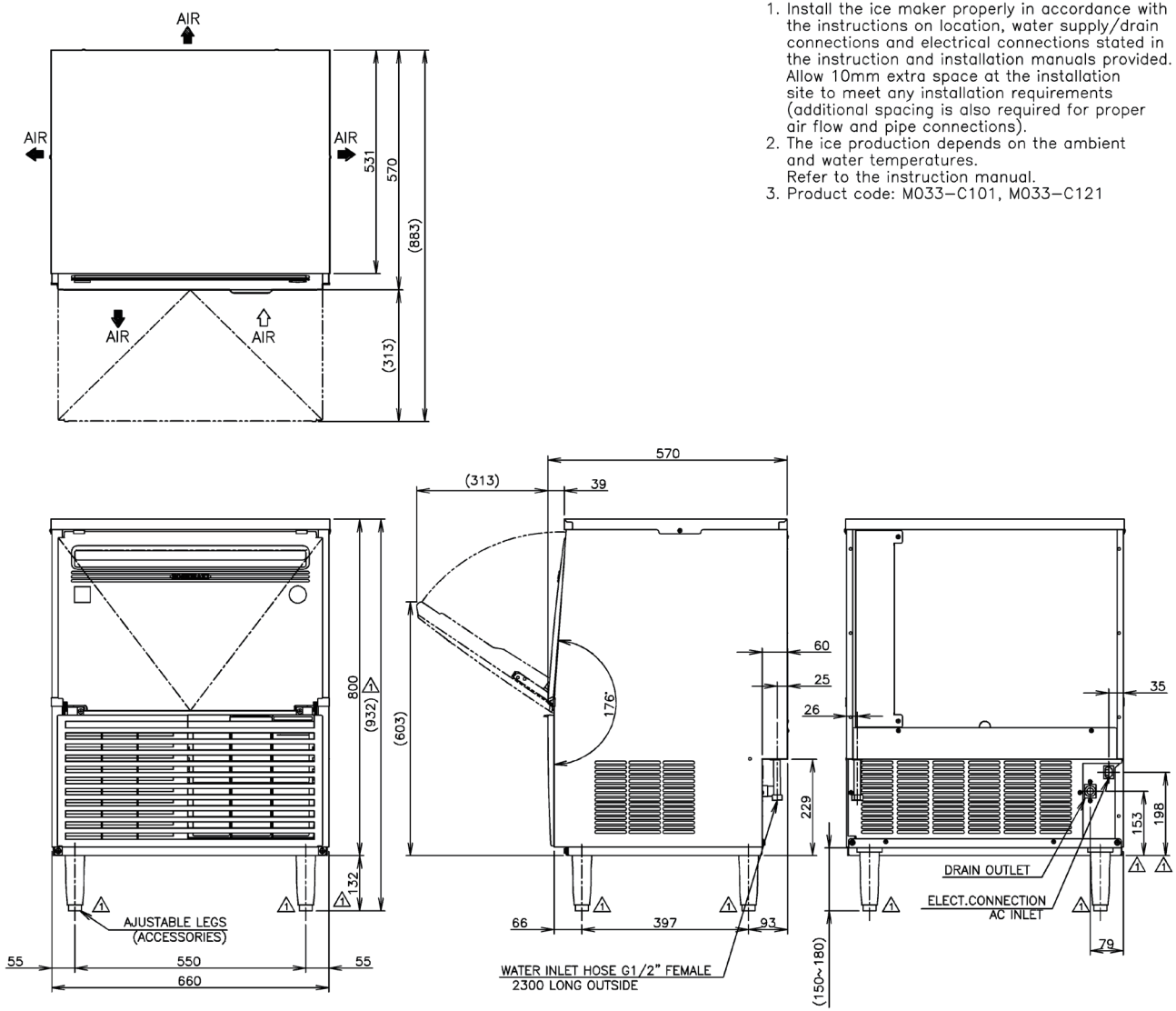

1. Install the ice maker properly in accordance with the instructions on location, water supply/drain connections and electrical connections stated in the instruction and installation manuals provided. Allow 10mm extra space at the installation site to meet any installation requirements (additional spacing is also required for proper air flow and pipe connections).
2. The ice production depends on the ambient and water temperatures. Refer to the instruction manual.
3. Product code: M033–C101, M033–C121

ITEM	Hoshizaki Cube Ice Maker	
MODEL	IM–65A	
AC SUPPLY VOLTAGE	1 PHASE 220–240V 50Hz	
AMPERAGE	3.2A (AT.32°C, WT.21°C)	
STARTING AMPERAGE	18A	
ELECTRIC CONSUMPTION	390W (AT.32°C, WT.21°C)	
POWER FACTOR	51%	
POWER SUPPLY CAPACITY	Min. 1.18kVA (5.0A)	
ICE PRODUCTION PER 24h	Approx. 65kg (5mm) / 70kg (15mm) (AT.10°C, WT.10°C) Approx. 56kg (5mm) / 62kg (15mm) (AT.21°C, WT.15°C) Approx. 45kg (5mm) / 49kg (15mm) (AT32°C, WT.21°C)	
WATER CONSUMPTION PER 24h	Approx. 0.18m³(5mm)(AT.10°C, WT.10°C) Approx. 0.14m³(5mm) (AT.21°C, WT.15°C) Approx. 0.12m³(5mm) (AT32°C, WT.21°C)	
SHAPE OF ICE	Cube Approx. 28× 28× 32mm	
FREEZE CYCLE TIME	26min (5mm) (AT.21°C, WT.15°C)	
ICE PRODUCTION PER CYCLE	0.94kg/42pcs.(5mm) (AT.21°C, WT.15°C)	
MAX STORAGE CAPACITY	26kg(Bin Control Setting Approx. 15kg)	
DIMENSIONS	660mm(W) × 570mm(D) × 800mm(H)	
EXTERIOR	Stainless Steel, Plastic Door & Louver, Galvanized Steel(Rear)	
INSULATION	Polyurethane Foam	
INSULATION FOAM BLOWING AGENT	Cyclopentane	
CONNECTIONS–ELECTRIC	X–Type Connection	
CONNECTIONS–WATER SUPPLY	Inlet G1/2" (connected at rear side)	
CONNECTIONS–DRAIN	Outlet I.D. ϕ22mm (connected at rear side)	
ICE MAKING SYSTEM	Cell type	
HARVESTING SYSTEM	Hot Gas Defrost	
COMPRESSOR	Hermetic	
CONDENSER	Air–cooled	
HEAT REJECTION	910W 783kcal/h	
EVAPORATOR	Tin–plated Copper Tube on Sheet and Cells	
REFRIGERANT CONTROL	Capillary Tube	
REFRIGERANT CHARGE	R134a / 260g	
ICE MAKING CONTROL SYSTEM	Thermistor, Timer	Controller Board
HARVESTING CONTROL SYSTEM	Thermistor	Controller Board
BIN CONTROL SYSTEM	Microswitch with Time Delay	Controller Board
ICE MAKING WATER CONTROL SYSTEM	Timer, Water Pan's movement	Controller Board
ELECTRICAL PROTECTION	Class I Appliance, 5A Fuse	
COMPRESSOR PROTECTION	Auto–reset Overload Protector	
ICE MAKER PROTECTION	Interlock by Controller Board	
WEIGHT	Net weight 60kg/Gross weight 74kg	
PACKAGE	Carton 760mm(W) × 680mm(D) × 980mm(H)	
ACCESSORIES	Scoop, Leg, Installation Kit	
OPERATING CONDITIONS	Ambient Temp.:1–40°C, Water Supply Temp.:5–35°C Water Supply Pressure:0.07–0.78MPa(0.7–8bar) Voltage Range: Rated Voltage±6%	

*We reserve the right to make changes in specifications and design without prior notice.

[j] IM-65A (60Hz) [Jiaxipera compressor: auxiliary code H0 and earlier]

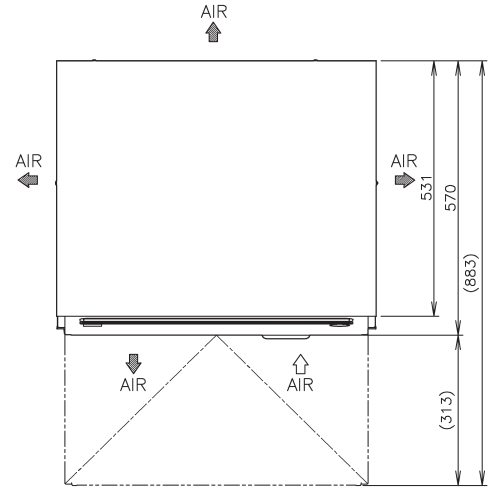

1. Install the ice maker properly in accordance with the instructions on location, water supply/drain connections and electrical connections stated in the instruction and installation manuals provided. Allow 10mm extra space at the installation site to meet any installation requirements (additional spacing is also required for proper air flow and pipe connections).
2. The ice production depends on the ambient and water temperatures. Refer to the instruction manual.
3. Product code: M033–C151, M033–C161

ITEM	Hoshizaki Cube Ice Maker	
MODEL	IM–65A	
POWER SUPPLY	1 PHASE 230V 60Hz Capacity: Min. 1.01kVA (4.4A)	
AMPERAGE	Running: 2.4A Rated Motor: 2.4A Starting: 17A	
ELECTRIC CONSUMPTION	Rated Motor: 387W (AT.32°C, WT.21°C) (Power Factor: 70%)	
ICE PRODUCTION PER 24h	Approx. 59kg (5mm) / 64kg (15mm) (AT.10°C, WT.10°C) Approx. 60kg (5mm) / 67kg (15mm) (AT.21°C, WT.15°C) Approx. 53kg (5mm) / 59kg (15mm) (AT32°C, WT.21°C)	
WATER CONSUMPTION PER 24h	Approx. 0.23m³ (5mm) (AT.10°C, WT.10°C) Approx. 0.13m³ (5mm) (AT.21°C, WT.15°C) Approx. 0.11m³ (5mm) (AT32°C, WT.21°C)	
SHAPE OF ICE	Cube Approx. 28x28x32mm	
FREEZE CYCLE TIME	Approx. 20min (5mm) (AT.21°C, WT.15°C)	
ICE PRODUCTION PER CYCLE	0.94kg/42pcs.(5mm) (AT.21°C, WT.15°C)	
MAX STORAGE CAPACITY	26kg(Bin Control Setting Approx. 15kg)	
DIMENSIONS	660mm(W) x 570mm(D) x 800mm(H)	
EXTERIOR	Stainless Steel, Plastic Door & Louver, Galvanized Steel(Rear)	
INSULATION	Polyurethane Foam	
INSULATION FOAM BLOWING AGENT	Cyclopentane	
CONNECTIONS–ELECTRIC	X–Type Connection	
CONNECTIONS–WATER SUPPLY	Inlet G1/2" (connected at rear side)	
CONNECTIONS–DRAIN	Outlet I.D. ϕ22mm (connected at rear side)	
ICE MAKING SYSTEM	Cell type	
HARVESTING SYSTEM	Hot Gas Defrost	
COMPRESSOR	Hermetic	
CONDENSER	Air–cooled	
HEAT REJECTION	980W(843kcal/h)	
EVAPORATOR	Tin–plated Copper Tube on Sheet and Cells	
REFRIGERANT CONTROL	Capillary Tube	
REFRIGERANT CHARGE	R134a / 260g	
ICE MAKING CONTROL SYSTEM	Thermistor, Timer	Controller Board
HARVESTING CONTROL SYSTEM	Thermistor	Controller Board
BIN CONTROL SYSTEM	Microswitch with Time Delay	Controller Board
ICE MAKING WATER CONTROL SYSTEM	Timer, Water Pan's movement	Controller Board
ELECTRICAL PROTECTION	Class I Appliance, 5A Fuse	
COMPRESSOR PROTECTION	Auto–reset Overload Protector	
ICE MAKER PROTECTION	Interlock by Controller Board	
WEIGHT	Net weight 60kg/Gross weight 74kg	
PACKAGE	Carton 760mm(W) x 680mm(D) x 980mm(H)	
ACCESSORIES	Scoop, Leg, Installation Kit	
OPERATING CONDITIONS	Ambient Temp.:1–40°C, Water Supply Temp.:5–35°C Water Supply Pressure:0.07–0.78MPa(0.7–8bar) Voltage Range: Rated Voltage±6%	

*We reserve the right to make changes in specifications and design without prior notice.

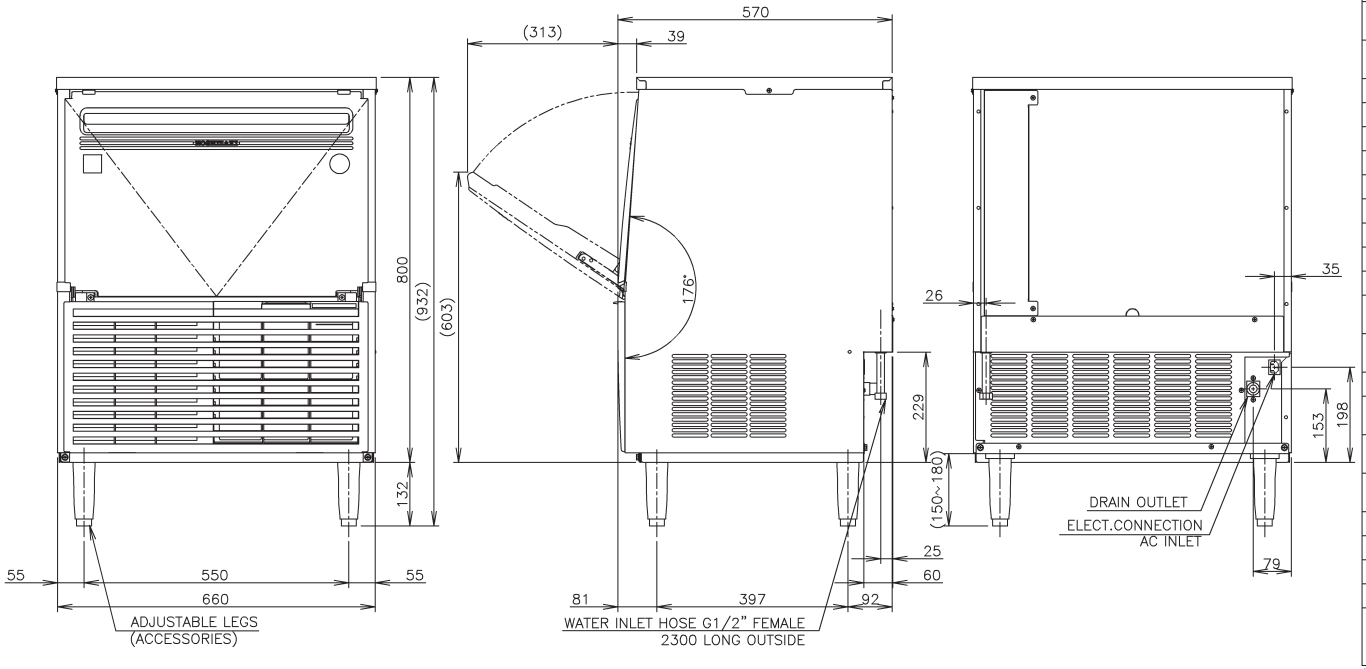

[k] IM-65A (50Hz) [Secop compressor: auxiliary code H1 and later]

ITEM	Hoshizaki Cube Ice Maker
MODEL	IM-65A
POWER SUPPLY	1 PHASE 220-240V 50Hz Capacity: Min. 0.86kVA (3.6A)
AMPERAGE	Running: 2.7A Rated Motor: 2.7A Starting: 13A
ELECTRIC CONSUMPTION	Rated Motor: 390W (AT.32°C, WT.21°C) (Power Factor: 60%)
ICE PRODUCTION PER 24h	Approx. 65kg (5mm) / 70kg (15mm) (AT.10°C, WT.10°C) Approx. 56kg (5mm) / 62kg (15mm) (AT.21°C, WT.15°C) Approx. 45kg (5mm) / 49kg (15mm) (AT32°C, WT.21°C)
WATER CONSUMPTION PER 24h	Approx. 0.18m³(5mm)(AT.10°C, WT.10°C) Approx. 0.14m³(5mm) (AT.21°C, WT.15°C) Approx. 0.12m³(5mm) (AT32°C, WT.21°C)
SHAPE OF ICE	Cube Approx. 28x28x32mm
FREEZE CYCLE TIME	26min (5mm) (AT.21°C, WT.15°C)
ICE PRODUCTION PER CYCLE	0.94kg/42pcs.(5mm) (AT.21°C, WT.15°C)
MAX STORAGE CAPACITY	26kg(Bin Control Setting Approx. 15kg)
DIMENSIONS	660mm(W) x 570mm(D) x 800mm(H)
EXTERIOR	Stainless Steel, Plastic Door & Louver, Galvanized Steel(Rear)
INSULATION	Polyurethane Foam
INSULATION FOAM BLOWING AGENT	Cyclopentane
CONNECTIONS-ELECTRIC	X-Type Connection
CONNECTIONS-WATER SUPPLY	Inlet G1/2" (connected at rear side)
CONNECTIONS-DRAIN	Outlet I.D. ϕ22mm (connected at rear side)
ICE MAKING SYSTEM	Cell type
HARVESTING SYSTEM	Hot Gas Defrost
COMPRESSOR	Hermetic
CONDENSER	Air-cooled
HEAT REJECTION	910W 783kcal/h
EVAPORATOR	Tin-plated Copper Tube on Sheet and Cells
REFRIGERANT CONTROL	Capillary Tube
REFRIGERANT CHARGE	R134a / 260g
ICE MAKING CONTROL SYSTEM	Thermistor, Timer (Controller Board)
HARVESTING CONTROL SYSTEM	Thermistor (Controller Board)
BIN CONTROL SYSTEM	Microswitch with Time Delay (Controller Board)
ICE MAKING WATER CONTROL SYSTEM	Timer, Water Pan's movement (Controller Board)
ELECTRICAL PROTECTION	Class I Appliance, 5A Fuse
COMPRESSOR PROTECTION	Auto-reset Overload Protector
ICE MAKER PROTECTION	Interlock by Controller Board
WEIGHT	Net weight 60kg/Gross weight 74kg
PACKAGE	Carton 760mm(W) x 680mm(D) x 970mm(H)
ACCESSORIES	Scoop, Leg, Installation Kit
OPERATING CONDITIONS	Ambient Temp.:1-40°C, Water Supply Temp.:5-35°C Water Supply Pressure:0.07-0.78MPa(0.7-8bar) Voltage Range: Rated Voltage±6%

*We reserve the right to make changes in specifications and design without prior notice.

1. Install the ice maker properly in accordance with the instructions on location, water supply/drain connections and electrical connections stated in the instruction and installation manuals provided. Allow 10mm extra space at the installation site to meet any installation requirements (additional spacing is also required for proper air flow and pipe connections).
2. The ice production depends on the ambient and water temperatures. Refer to the instruction manual.
3. Product code: M033-C101, M033-C121

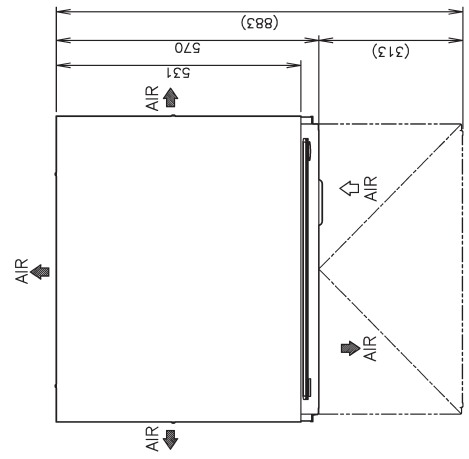

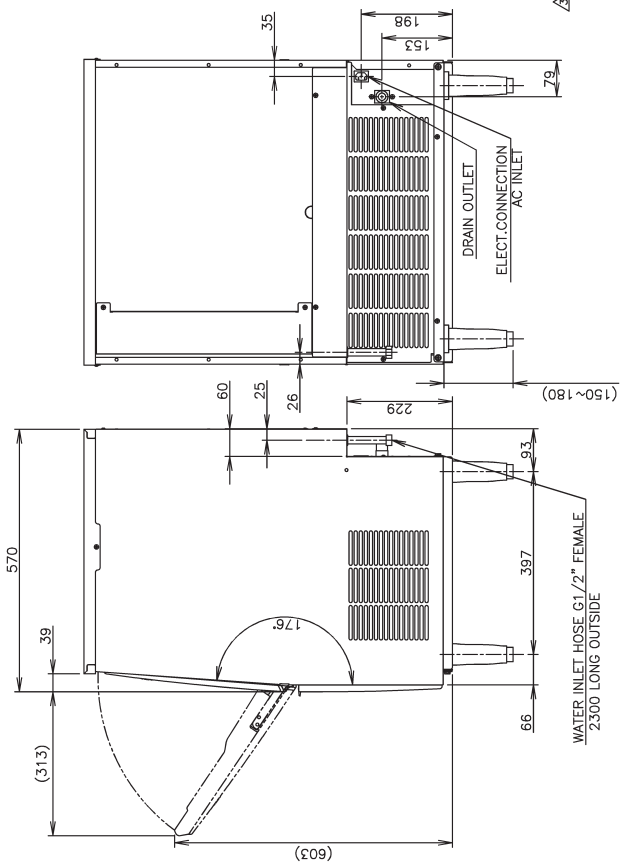

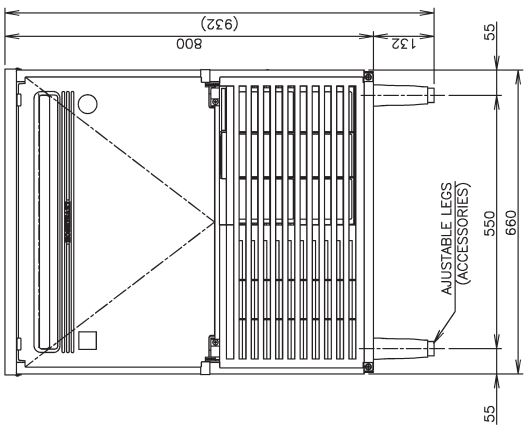

[I] IM-65A (60Hz) [Secop compressor: auxiliary code H1 and later]

ITEM	Hoshizaki Cube Ice Maker
MODEL	IM-65A
POWER SUPPLY	1 PHASE 230V 60Hz Capacity: Min. 0.86kVA (3.6A)
AMPERAGE	Running: 2.4A Rated Motor: 2.4A Starting: 13A
ELECTRIC CONSUMPTION	Rated Motor: 430W (AT.32°C, WT.21°C) (Power Factor: 77%)
ICE PRODUCTION PER 24h	Approx. 59kg (5mm) / 64kg (15mm) (AT.10°C, WT.10°C) Approx. 60kg (5mm) / 67kg (15mm) (AT.21°C, WT.15°C) Approx. 53kg (5mm) / 59kg (15mm) (AT32°C, WT.21°C)
WATER CONSUMPTION PER 24h	Approx. 0.23m³(5mm) (AT.10°C, WT.10°C) Approx. 0.13m³(5mm) (AT.21°C, WT.15°C) Approx. 0.11m³(5mm) (AT32°C, WT.21°C)
SHAPE OF ICE	Cube Approx. 28x28x32mm
FREEZE CYCLE TIME	Approx. 20min (5mm) (AT.21°C, WT.15°C)
ICE PRODUCTION PER CYCLE	0.94kg/42pcs.(5mm) (AT.21°C, WT.15°C)
MAX STORAGE CAPACITY	26kg(Bin Control Setting Approx. 15kg)
DIMENSIONS	660mm(W) x 570mm(D) x 800mm(H)
EXTERIOR	Stainless Steel, Plastic Door & Louver, Galvanized Steel(Rear)
INSULATION	Polyurethane Foam
INSULATION FOAM BLOWING AGENT	Cyclopentane
CONNECTIONS-ELECTRIC	X-Type Connection
CONNECTIONS-WATER SUPPLY	Inlet G1/2" (connected at rear side)
CONNECTIONS-DRAIN	Outlet I.D. ϕ22mm (connected at rear side)
ICE MAKING SYSTEM	Cell type
HARVESTING SYSTEM	Hot Gas Defrost
COMPRESSOR	Hermetic
CONDENSER	Air-cooled
HEAT REJECTION	980W(843kcal/h)
EVAPORATOR	Tin-plated Copper Tube on Sheet and Cells
REFRIGERANT CONTROL	Capillary Tube
REFRIGERANT CHARGE	R134a / 260g
ICE MAKING CONTROL SYSTEM	Thermistor, Timer (Controller Board)
HARVESTING CONTROL SYSTEM	Thermistor (Controller Board)
BIN CONTROL SYSTEM	Microswitch with Time Delay (Controller Board)
ICE MAKING WATER CONTROL SYSTEM	Timer, Water Pan's movement (Controller Board)
ELECTRICAL PROTECTION	Class I Appliance, 5A Fuse
COMPRESSOR PROTECTION	Auto-reset Overload Protector
ICE MAKER PROTECTION	Interlock by Controller Board
WEIGHT	Net weight 60kg/Gross weight 74kg
PACKAGE	Carton 760mm(W) x 680mm(D) x 970mm(H)
ACCESSORIES	Scoop, Leg, Installation Kit
OPERATING CONDITIONS	Ambient Temp.:1~40°C, Water Supply Temp.:5~35°C Water Supply Pressure:0.07~0.78MPa(0.7~8bar) Voltage Range: Rated Voltage±6%

*We reserve the right to make changes in specifications and design without prior notice.

1. Install the ice maker properly in accordance with the instructions on location, water supply/drain connections and electrical connections stated in the instruction and installation manuals provided. Allow 10mm extra space at the installation site to meet any installation requirements (additional spacing is also required for proper air flow and pipe connections).
2. The ice production depends on the ambient and water temperatures. Refer to the instruction manual.
3. Product code: M033-C151, M033-C161

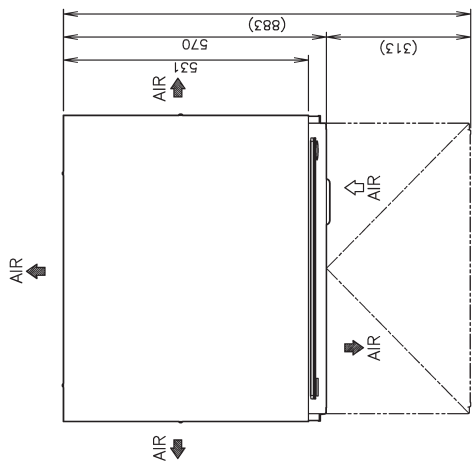

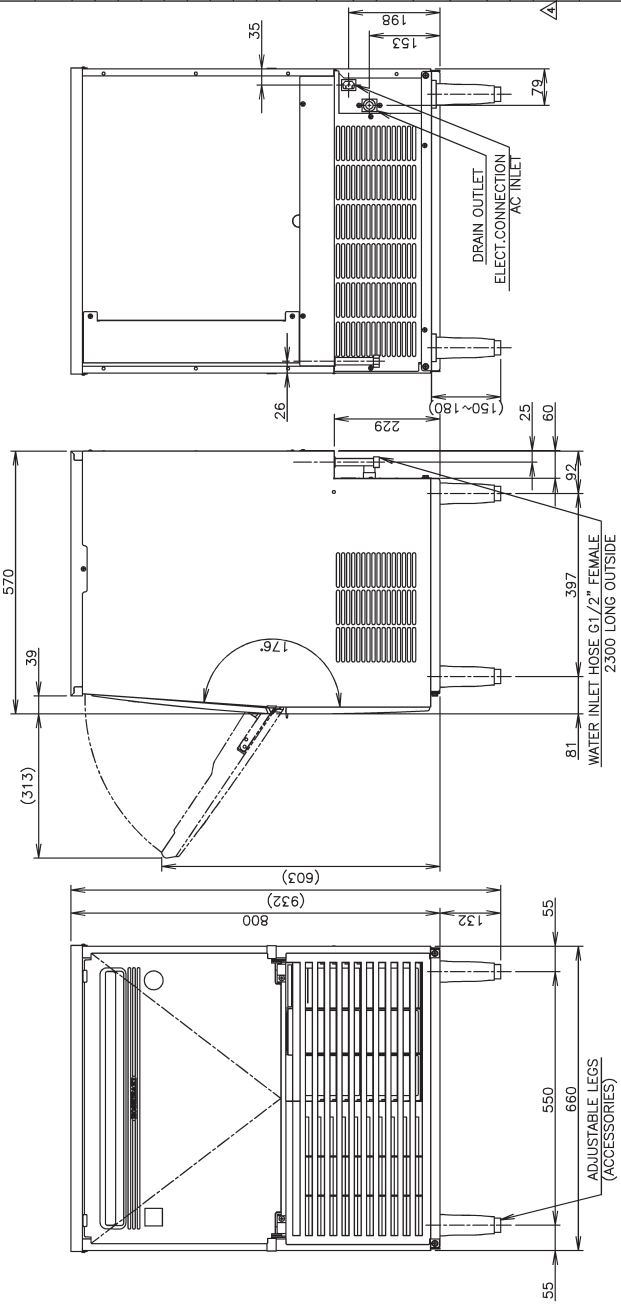

[m] IM-45CA (50Hz)

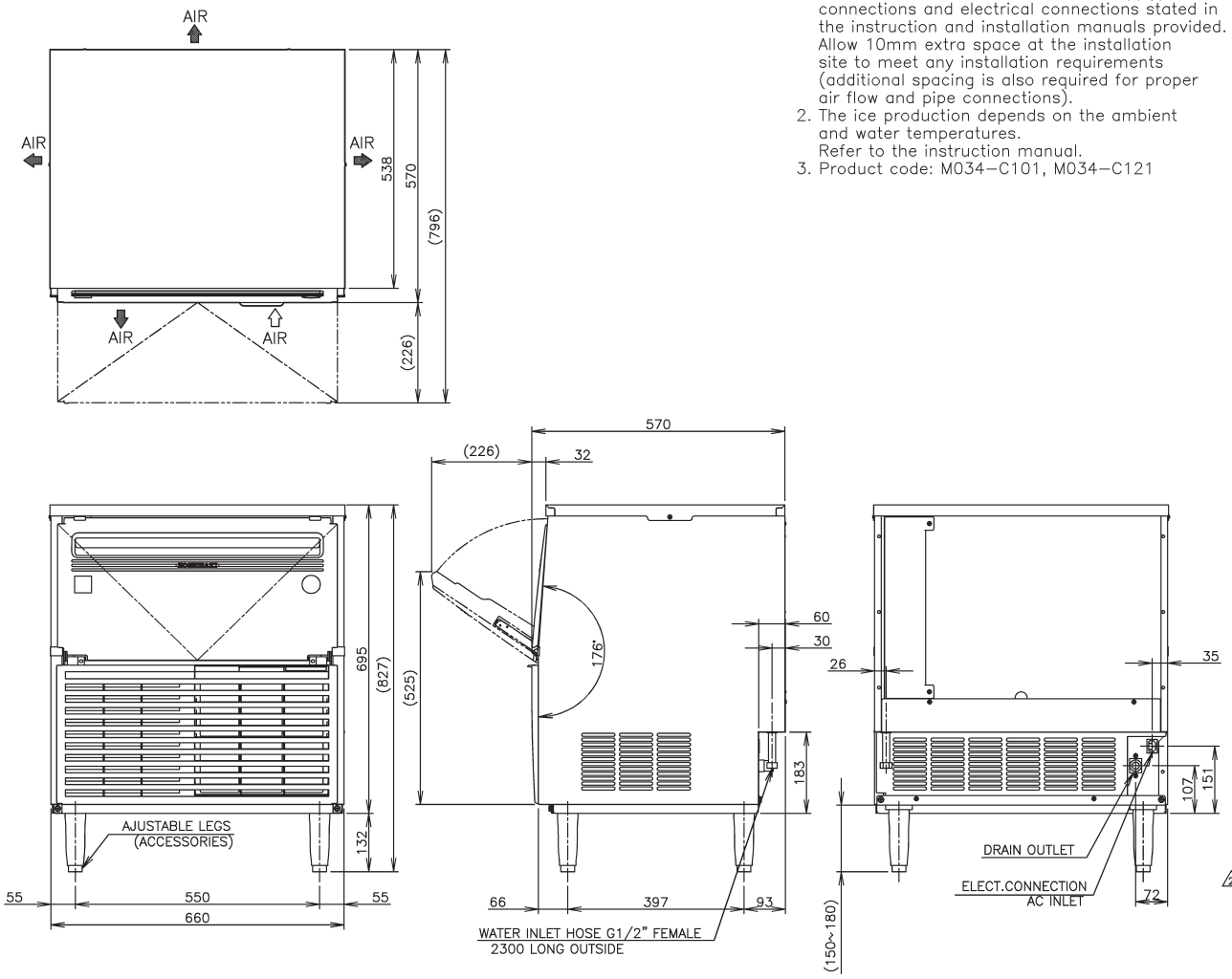

1. Install the ice maker properly in accordance with the instructions on location, water supply/drain connections and electrical connections stated in the instruction and installation manuals provided. Allow 10mm extra space at the installation site to meet any installation requirements (additional spacing is also required for proper air flow and pipe connections).
2. The ice production depends on the ambient and water temperatures. Refer to the instruction manual.
3. Product code: M034–C101, M034–C121

ITEM	Hoshizaki Cube Ice Maker	
MODEL	IM–45CA	
AC SUPPLY VOLTAGE	1 PHASE 220–240V 50Hz	
AMPERAGE	2.0A (AT.32°C, WT.21°C)	
STARTING AMPERAGE	16A	
ELECTRIC CONSUMPTION	310W (AT.32°C, WT.21°C)	
POWER FACTOR	63%	
POWER SUPPLY CAPACITY	Min. 1.05kVA (4.4A)	
ICE PRODUCTION PER 24h	Approx. 45kg (5mm) / 47kg (15mm) (AT.10°C, WT.10°C) Approx. 44kg (5mm) / 44kg (15mm) (AT.21°C, WT.15°C) Approx. 35kg (5mm) / 38kg (15mm) (AT32°C, WT.21°C)	
WATER CONSUMPTION PER 24h	Approx. 0.18m³(5mm)(AT.10°C, WT.10°C) Approx. 0.12m³(5mm) (AT.21°C, WT.15°C) Approx. 0.10m³(5mm) (AT32°C, WT.21°C)	
SHAPE OF ICE	Cube Approx. 28× 28× 32mm	
FREEZE CYCLE TIME	23min (5mm) (AT.21°C, WT.15°C)	
ICE PRODUCTION PER CYCLE	0.67kg/30pcs.(5mm) (AT.21°C, WT.15°C)	
MAX STORAGE CAPACITY	15kg(Bin Control Setting Approx. 8kg)	
DIMENSIONS	660mm(W) × 570mm(D) × 695mm(H)	
EXTERIOR	Stainless Steel, Plastic Door & Louver, Galvanized Steel(Rear)	
INSULATION	Polyurethane Foam	
INSULATION FOAM BLOWING AGENT	Cyclopentane	
CONNECTIONS–ELECTRIC	X–Type Connection	
CONNECTIONS–WATER SUPPLY	Inlet G1/2" (connected at rear side)	
CONNECTIONS–DRAIN	Outlet I.D. ϕ22mm (connected at rear side)	
ICE MAKING SYSTEM	Cell type	
HARVESTING SYSTEM	Hot Gas Defrost	
COMPRESSOR	Hermetic	
CONDENSER	Air–cooled	
HEAT REJECTION	670W 576kcal/h	
EVAPORATOR	Tin–plated Copper Tube on Sheet and Cells	
REFRIGERANT CONTROL	Capillary Tube	
REFRIGERANT CHARGE	R134a / 160g	
ICE MAKING CONTROL SYSTEM	Thermistor, Timer	Controller Board
HARVESTING CONTROL SYSTEM	Thermistor	Controller Board
BIN CONTROL SYSTEM	Microswitch with Time Delay	Controller Board
ICE MAKING WATER CONTROL SYSTEM	Timer, Water Pan's movement	Controller Board
ELECTRICAL PROTECTION	Class I Appliance, 5A Fuse	
COMPRESSOR PROTECTION	Auto–reset Overload Protector	
ICE MAKER PROTECTION	Interlock by Controller Board	
WEIGHT	Net weight 52kg/Gross weight 65kg	
PACKAGE	Carton 760mm(W) × 680mm(D) × 870mm(H)	
ACCESSORIES	Scoop, Leg, Installation Kit	
OPERATING CONDITIONS	Ambient Temp.:1–40°C, Water Supply Temp.:5–35°C Water Supply Pressure:0.07–0.78MPa(0.7–8bar) Voltage Range: Rated Voltage±6%	

※We reserve the right to make changes in specifications and design without prior notice.

[n] IM-45CA (60Hz)

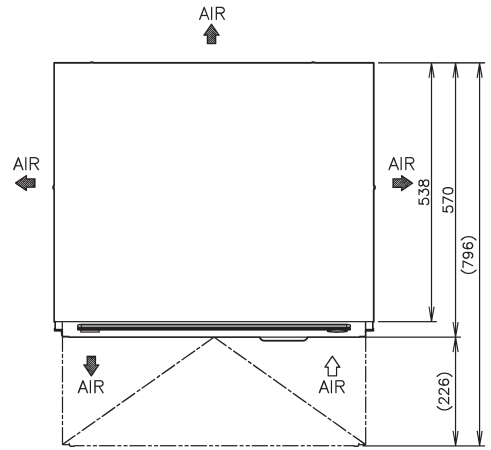

1. Install the ice maker properly in accordance with the instructions on location, water supply/drain connections and electrical connections stated in the instruction and installation manuals provided. Allow 10mm extra space at the installation site to meet any installation requirements (additional spacing is also required for proper air flow and pipe connections).
2. The ice production depends on the ambient and water temperatures. Refer to the instruction manual.
3. Product code: M034–C151, M034–C161

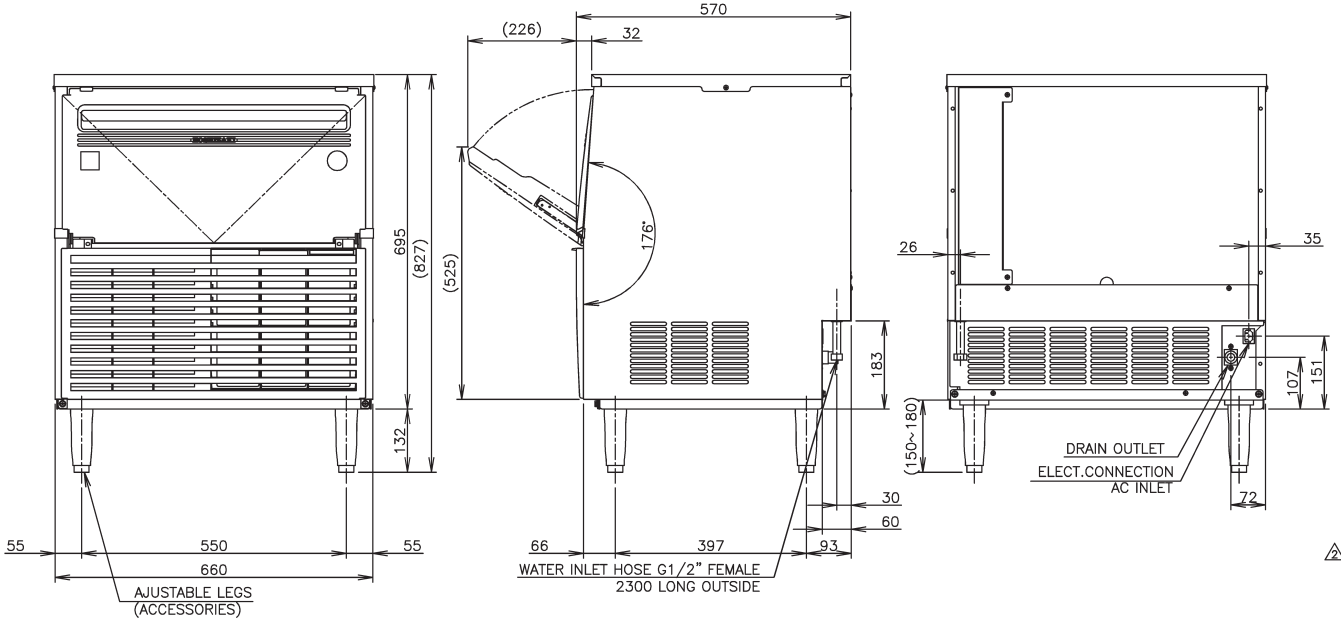

ITEM	Hoshizaki Cube Ice Maker	
MODEL	IM–45CA	
POWER SUPPLY	1 PHASE 230V 60Hz Capacity: Min. 0.81kVA (3.5A)	
AMPERAGE	Running: 1.9A Rated Motor: 1.9A Starting: 11A	
ELECTRIC CONSUMPTION	Rated Motor: 344W (AT.32°C, WT.21°C) (Power Factor: 77%)	
ICE PRODUCTION PER 24h	Approx. 43kg (5mm) / 46kg (15mm) (AT.10°C, WT.10°C) Approx. 41kg (5mm) / 45kg (15mm) (AT.21°C, WT.15°C) Approx. 36kg (5mm) / 39kg (15mm) (AT32°C, WT.21°C)	
WATER CONSUMPTION PER 24h	Approx. 0.20m³(5mm) / 0.24m³(15mm)(AT.10°C, WT.10°C) Approx. 0.11m³(5mm) / 0.14m³(15mm)(AT.21°C, WT.15°C) Approx. 0.10m³(5mm) /0.12m³(15mm) (AT32°C, WT.21°C)	
SHAPE OF ICE	Cube Approx. 28x28x32mm	
FREEZE CYCLE TIME	Approx. 21min (5mm) (AT.21°C, WT.15°C)	
ICE PRODUCTION PER CYCLE	0.67kg/30pcs.(5mm) (AT.21°C, WT.15°C)	
MAX STORAGE CAPACITY	15kg(Bin Control Setting Approx. 8kg)	
DIMENSIONS	660mm(W) x 570mm(D) x 695mm(H)	
EXTERIOR	Stainless Steel, Plastic Door & Galvanized Steel(Rear)	
INSULATION	Polyurethane Foam	
INSULATION FOAM BLOWING AGENT	Cyclopentane	
CONNECTIONS–ELECTRIC	X–Type Connection	
CONNECTIONS–WATER SUPPLY	Inlet G1/2" (connected at rear side)	
CONNECTIONS–DRAIN	Outlet I.D. ϕ22mm (connected at rear side)	
ICE MAKING SYSTEM	Cell type	
HARVESTING SYSTEM	Hot Gas Defrost	
COMPRESSOR	Hermetic	
CONDENSER	Air–cooled	
HEAT REJECTION	530W (456kcal/h)	
EVAPORATOR	Tin–plated Copper Tube on Sheet and Cells	
REFRIGERANT CONTROL	Capillary Tube	
REFRIGERANT CHARGE	R134a / 160g	
ICE MAKING CONTROL SYSTEM	Thermistor, Timer	Controller Board
HARVESTING CONTROL SYSTEM	Thermistor	Controller Board
BIN CONTROL SYSTEM	Microswitch with Time Delay	Controller Board
ICE MAKING WATER CONTROL SYSTEM	Timer, Water Pan's movement	Controller Board
ELECTRICAL PROTECTION	Class I Appliance, 5A Fuse	
COMPRESSOR PROTECTION	Auto–reset Overload Protector	
ICE MAKER PROTECTION	Interlock by Controller Board	
WEIGHT	Net weight 52kg/Gross weight 65kg	
2 PACKAGE	Carton 760mm(W) x 680mm(D) x 870mm(H)	
ACCESSORIES	Scoop, Leg, Installation Kit	
OPERATING CONDITIONS	Ambient Temp.:1–40°C, Water Supply Temp.:5–35°C Water Supply Pressure:0.07–0.78MPa(0.7–8bar) Voltage Range: Rated Voltage±6%	

*We reserve the right to make changes in specifications and design without prior notice.

[o] IM-30CA (50Hz)

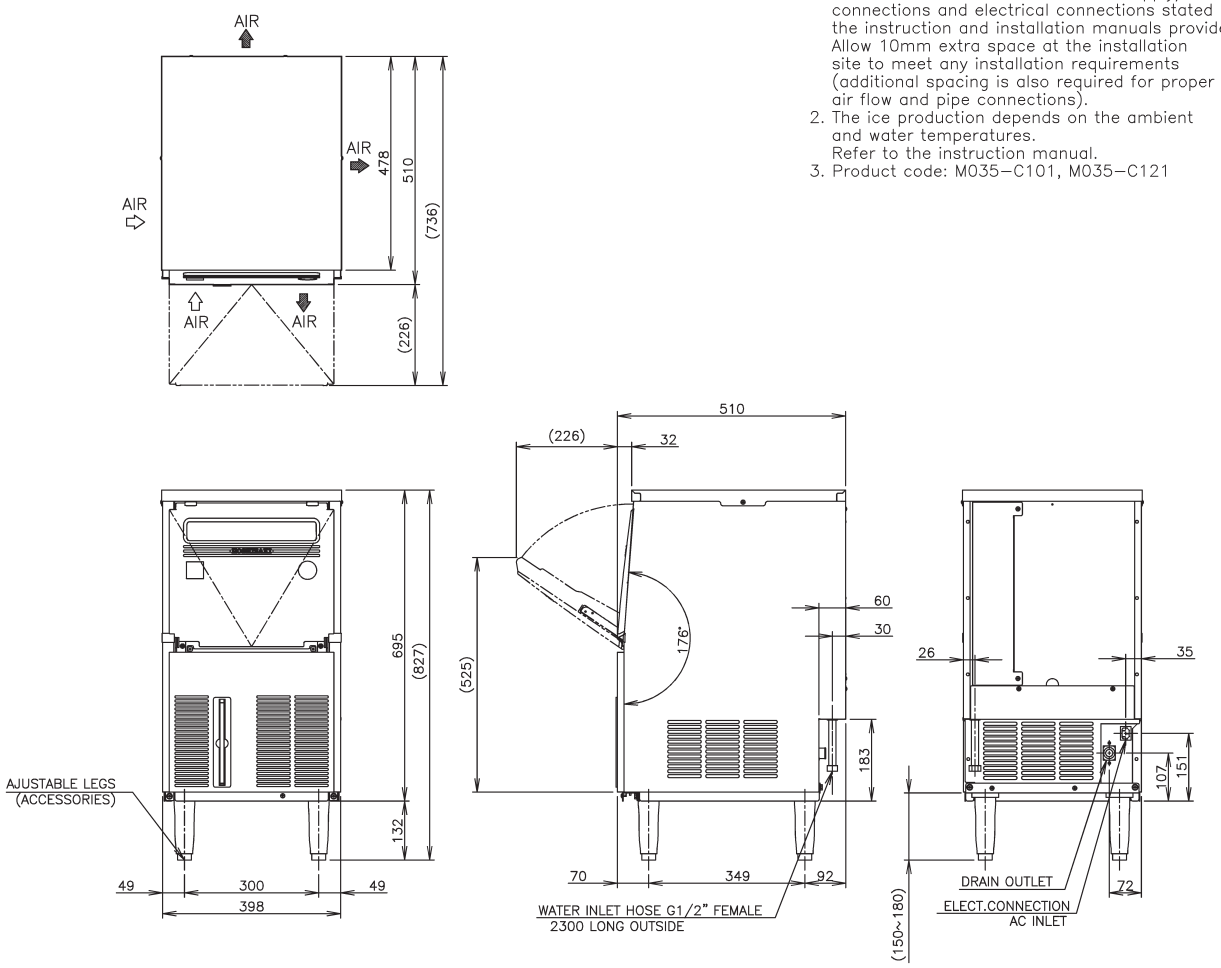

1. Install the ice maker properly in accordance with the instructions on location, water supply/drain connections and electrical connections stated in the instruction and installation manuals provided. Allow 10mm extra space at the installation site to meet any installation requirements (additional spacing is also required for proper air flow and pipe connections).
2. The ice production depends on the ambient and water temperatures. Refer to the instruction manual.
3. Product code: M035–C101, M035–C121

ITEM	Hoshizaki Cube Ice Maker	
MODEL	IM–30CA	
AC SUPPLY VOLTAGE	1 PHASE 220–240V 50Hz	
AMPERAGE	1.7A (AT.32°C, WT.21°C)	
STARTING AMPERAGE	9A	
ELECTRIC CONSUMPTION	250W (AT.32°C, WT.21°C)	
POWER FACTOR	61%	
POWER SUPPLY CAPACITY	Min. 0.59kVA (2.5A)	
ICE PRODUCTION PER 24h	Approx. 27kg (5mm) / 30kg (15mm) (AT.10°C, WT.10°C) Approx. 26kg (5mm) / 28kg (15mm) (AT.21°C, WT.15°C) Approx. 22kg (5mm) / 25kg (15mm) (AT32°C, WT.21°C)	
WATER CONSUMPTION PER 24h	Approx. 0.16m³(5mm)(AT.10°C, WT.10°C) Approx. 0.07m³(5mm) (AT.21°C, WT.15°C) Approx. 0.06m³(5mm) (AT32°C, WT.21°C)	
SHAPE OF ICE	Cube Approx. 28× 28× 32mm	
FREEZE CYCLE TIME	21min (5mm) (AT.21°C, WT.15°C)	
ICE PRODUCTION PER CYCLE	0.4kg/18pcs.(5mm) (AT.21°C, WT.15°C)	
MAX STORAGE CAPACITY	12kg(Bin Control Setting Approx. 6kg)	
DIMENSIONS	398mm(W) × 510mm(D) × 695mm(H)	
EXTERIOR	Stainless Steel, Plastic Door & Louver, Galvanized Steel(Rear)	
INSULATION	Polyurethane Foam	
INSULATION FOAM BLOWING AGENT	Cyclopentane	
CONNECTIONS–ELECTRIC	X–Type Connection	
CONNECTIONS–WATER SUPPLY	Inlet G1/2" (connected at rear side)	
CONNECTIONS–DRAIN	Outlet I.D. ϕ22mm (connected at rear side)	
ICE MAKING SYSTEM	Cell type	
HARVESTING SYSTEM	Hot Gas Defrost	
COMPRESSOR	Hermetic	
CONDENSER	Air–cooled	
HEAT REJECTION	520W 447kcal/h	
EVAPORATOR	Tin–plated Copper Tube on Sheet and Cells	
REFRIGERANT CONTROL	Capillary Tube	
REFRIGERANT CHARGE	R134a / 130g	
ICE MAKING CONTROL SYSTEM	Thermistor, Timer	Controller Board
HARVESTING CONTROL SYSTEM	Thermistor	Controller Board
BIN CONTROL SYSTEM	Microswitch with Time Delay	Controller Board
ICE MAKING WATER CONTROL SYSTEM	Timer, Water Pan's movement	Controller Board
ELECTRICAL PROTECTION	Class I Appliance, 5A Fuse	
COMPRESSOR PROTECTION	Auto–reset Overload Protector	
ICE MAKER PROTECTION	Interlock by Controller Board	
WEIGHT	Net weight 39kg/Gross weight 49kg	
△2 PACKAGE	Carton 490mm(W) × 610mm(D) × 870mm(H)	
ACCESSORIES	Scoop, Leg, Installation Kit	
OPERATING CONDITIONS	Ambient Temp.:1–40°C, Water Supply Temp.:5–35°C Water Supply Pressure:0.07–0.78MPa(0.7–8bar) Voltage Range: Rated Voltage±6%	

*We reserve the right to make changes in specifications and design without prior notice.

[p] IM-30CA (60Hz)

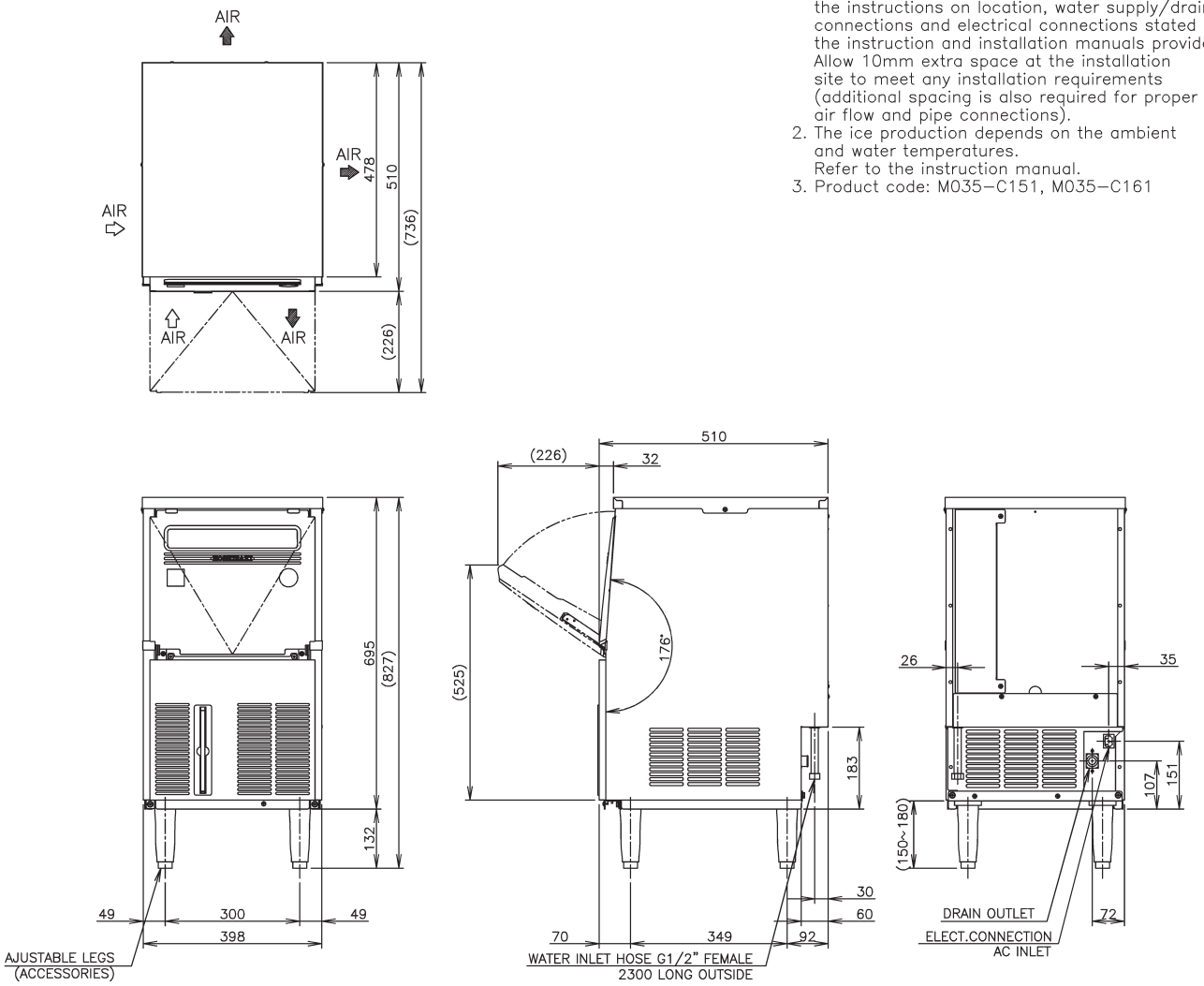

1. Install the ice maker properly in accordance with the instructions on location, water supply/drain connections and electrical connections stated in the instruction and installation manuals provided. Allow 10mm extra space at the installation site to meet any installation requirements (additional spacing is also required for proper air flow and pipe connections).
2. The ice production depends on the ambient and water temperatures. Refer to the instruction manual.
3. Product code: M035–C151, M035–C161

ITEM	Hoshizaki Cube Ice Maker	
MODEL	IM–30CA	
POWER SUPPLY	1 PHASE 230V 60Hz Capacity: Min. 0.61kVA (2.7A)	
AMPERAGE	Running: 1.4A Rated Motor: 1.4A Starting: 6A	
ELECTRIC CONSUMPTION	Rated Motor: 250W (AT.32°C, WT.21°C) (Power Factor: 78%)	
ICE PRODUCTION PER 24h	Approx. 27kg (5mm) / 31kg (15mm) (AT.10°C, WT.10°C) Approx. 24kg (5mm) / 27kg (15mm) (AT.21°C, WT.15°C) Approx. 20kg (5mm) / 21kg (15mm) (AT32°C, WT.21°C)	
WATER CONSUMPTION PER 24h	Approx. 0.19m³(5mm) (AT.10°C, WT.10°C) Approx. 0.07m³(5mm) (AT.21°C, WT.15°C) Approx. 0.05m³(5mm) (AT32°C, WT.21°C)	
SHAPE OF ICE	Cube Approx. 28x28x32mm	
FREEZE CYCLE TIME	Approx. 24min(5mm) (AT.21°C, WT.15°C)	
ICE PRODUCTION PER CYCLE	0.4kg/18pcs.(5mm) (AT.21°C, WT.15°C)	
MAX STORAGE CAPACITY	12kg(Bin Control Setting Approx. 6kg)	
DIMENSIONS	398mm(W) x 510mm(D) x 695mm(H)	
EXTERIOR	Stainless Steel, Plastic Door, Steel(Rear)	
INSULATION	Polyurethane Foam	
INSULATION FOAM BLOWING AGENT	Cyclopentane	
CONNECTIONS–ELECTRIC	X–Type Connection	
CONNECTIONS–WATER SUPPLY	Inlet G1/2" (connected at rear side)	
CONNECTIONS–DRAIN	Outlet I.D. ϕ22mm (connected at rear side)	
ICE MAKING SYSTEM	Cell type	
HARVESTING SYSTEM	Hot Gas Defrost	
COMPRESSOR	Hermetic	
CONDENSER	Air–cooled	
HEAT REJECTION	400W (344kcal/h)	
EVAPORATOR	Tin–plated Copper Tube on Sheet and Cells	
REFRIGERANT CONTROL	Capillary Tube	
REFRIGERANT CHARGE	R134a / 150g	
ICE MAKING CONTROL SYSTEM	Thermistor, Timer	Controller Board
HARVESTING CONTROL SYSTEM	Thermistor	Controller Board
BIN CONTROL SYSTEM	Microswitch with Time Delay	Controller Board
ICE MAKING WATER CONTROL SYSTEM	Timer, Water Pan's movement	Controller Board
ELECTRICAL PROTECTION	Class I Appliance, 5A Fuse	
COMPRESSOR PROTECTION	Auto–reset Overload Protector	
ICE MAKER PROTECTION	Interlock by Controller Board	
WEIGHT	Net weight 39kg/Gross weight 49kg	
3 PACKAGE	Carton 490mm(W) x 610mm(D) x 870mm(H)	
ACCESSORIES	Scoop, Leg, Installation Kit	
OPERATING CONDITIONS	Ambient Temp.:1–40°C, Water Supply Temp.:5–35°C Water Supply Pressure:0.07–0.78MPa(0.7–8bar) Voltage Range: Rated Voltage±6%	

*We reserve the right to make changes in specifications and design without prior notice.

II. GENERAL INFORMATION

1. CONSTRUCTION

[a] IM-220AA, IM-220AWA

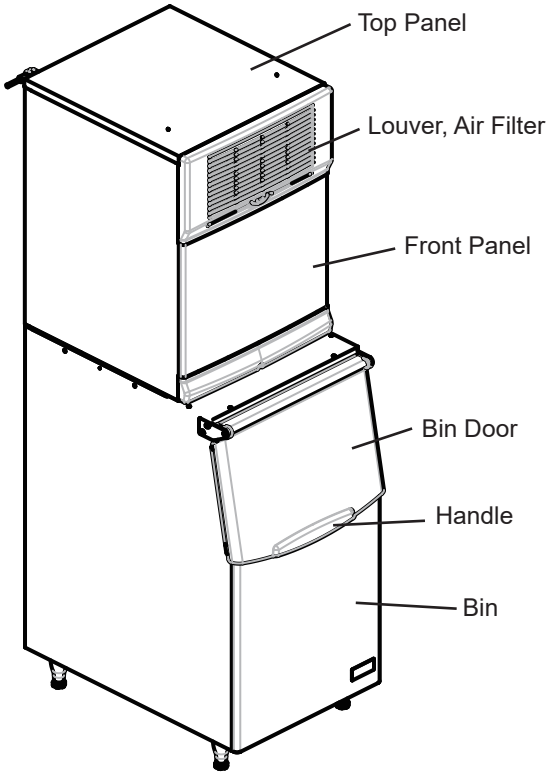

Front

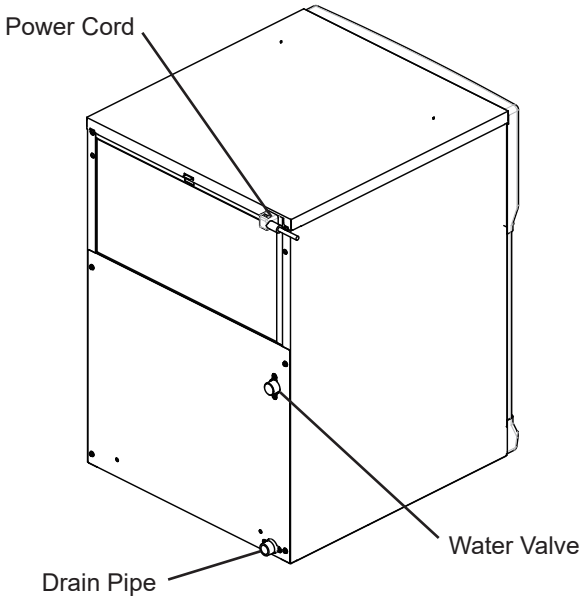

Rear

IM-220AA

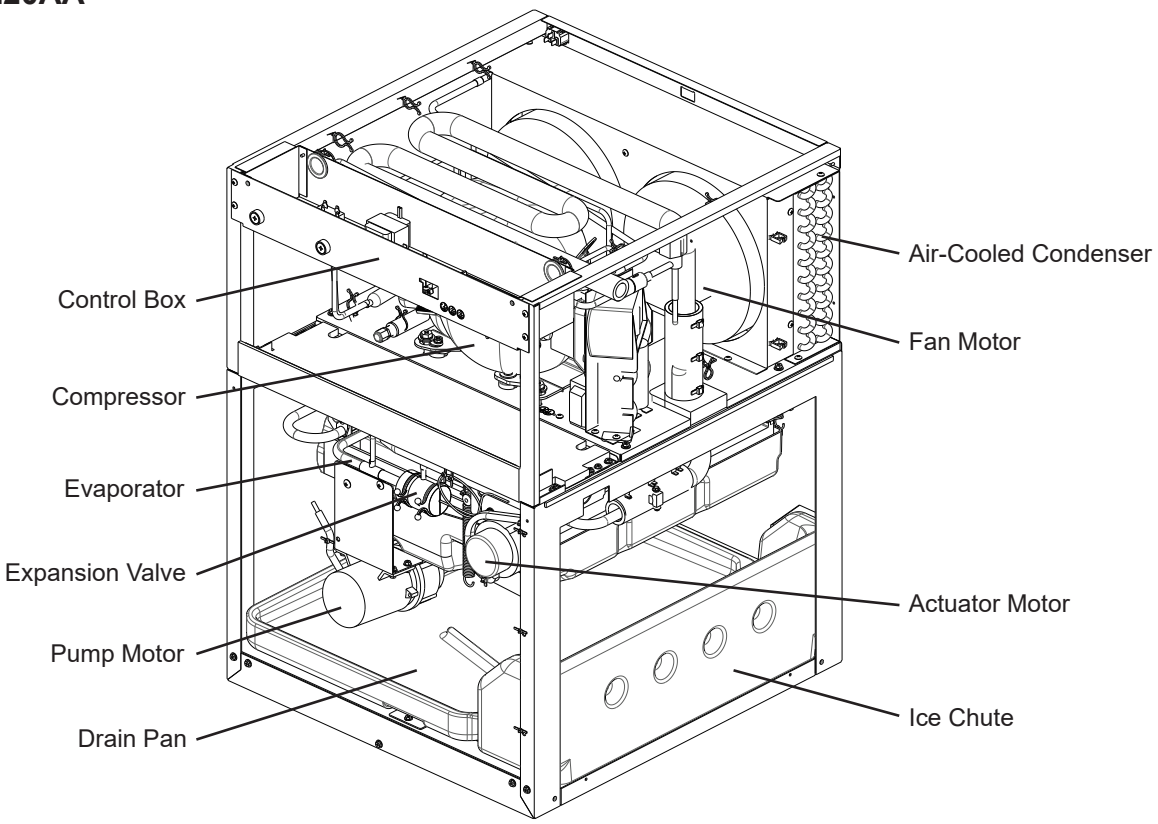

Front

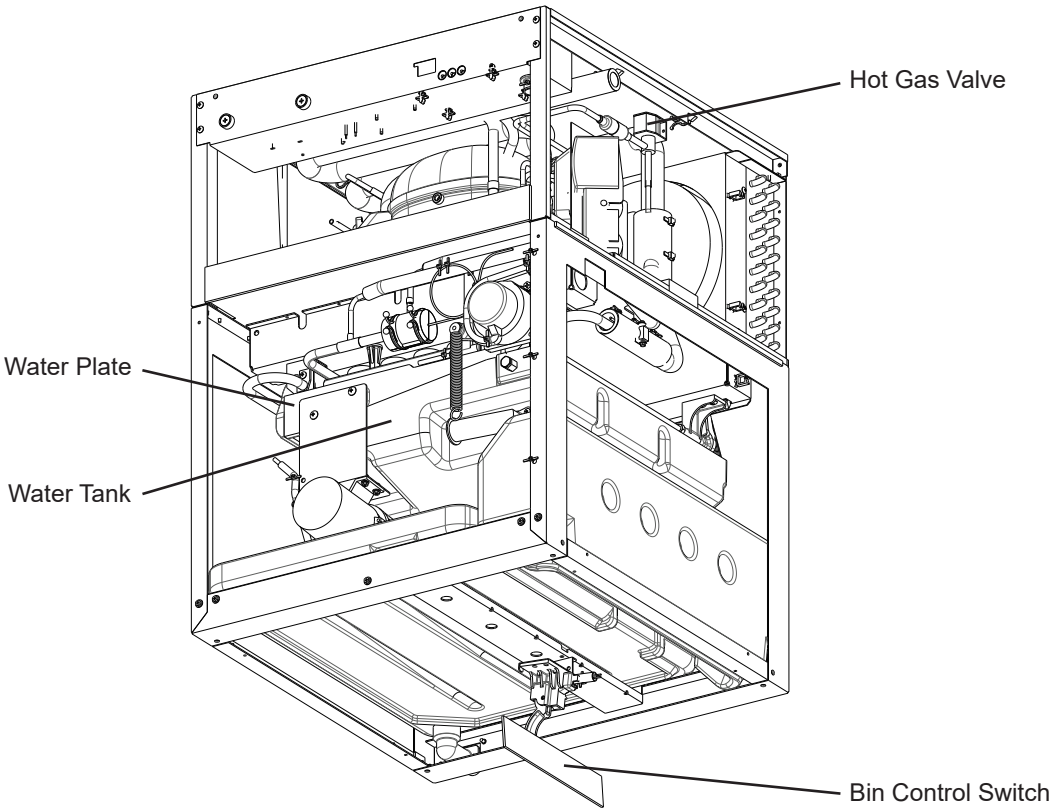

Bottom

IM-220AWA

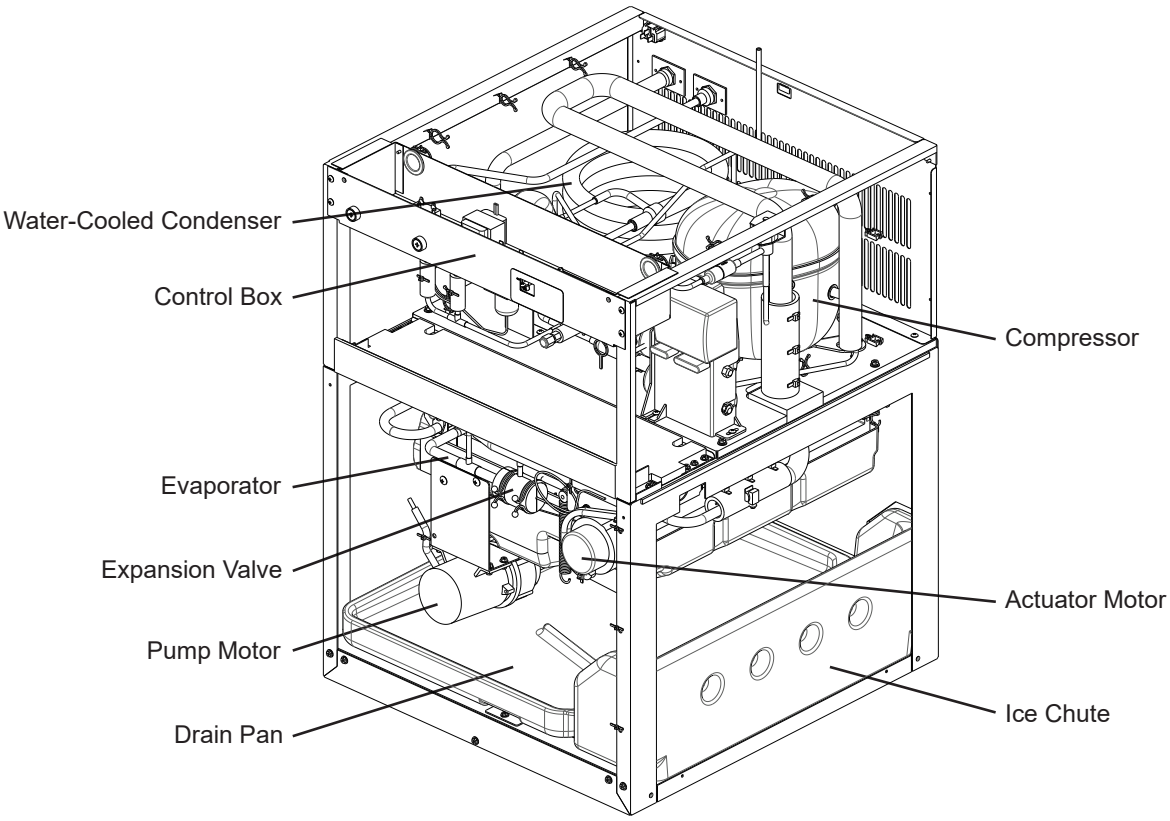

Front

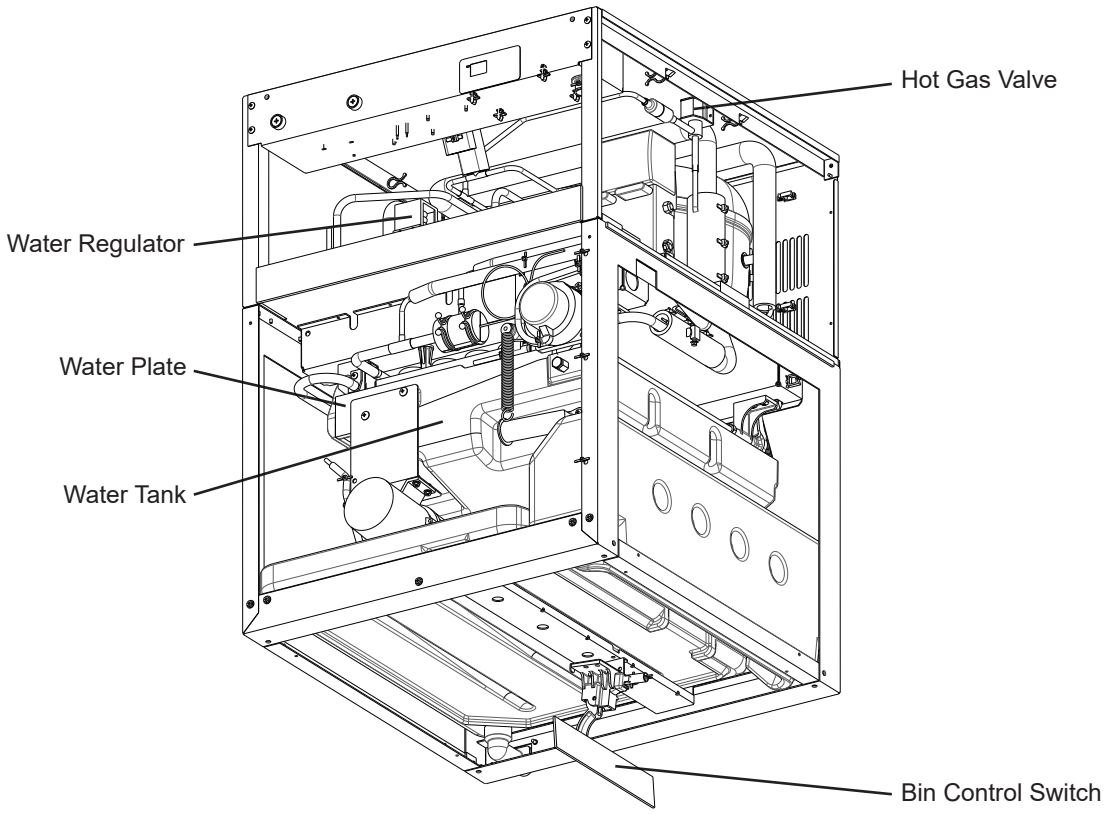

Bottom

[b] IM-100A, IM-130A

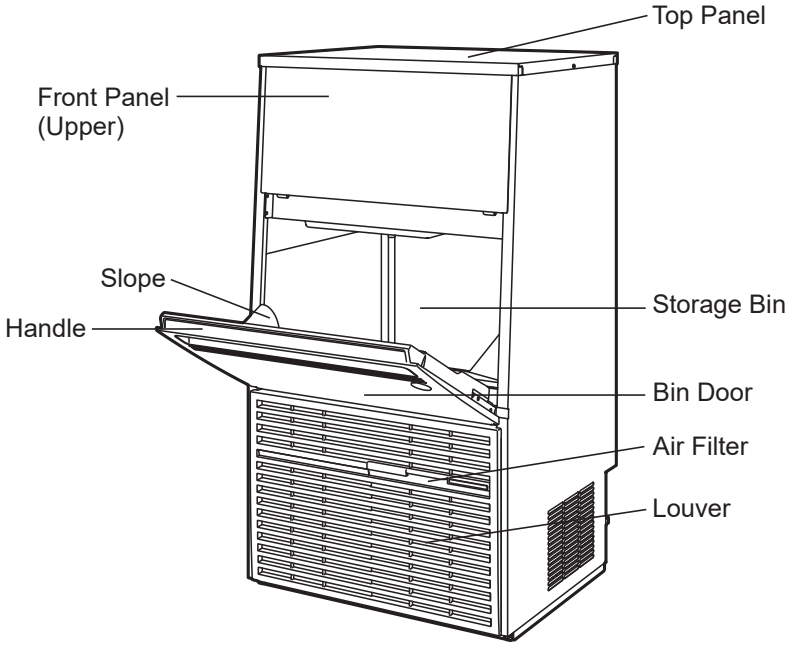

[c] IM-65A, IM-45CA

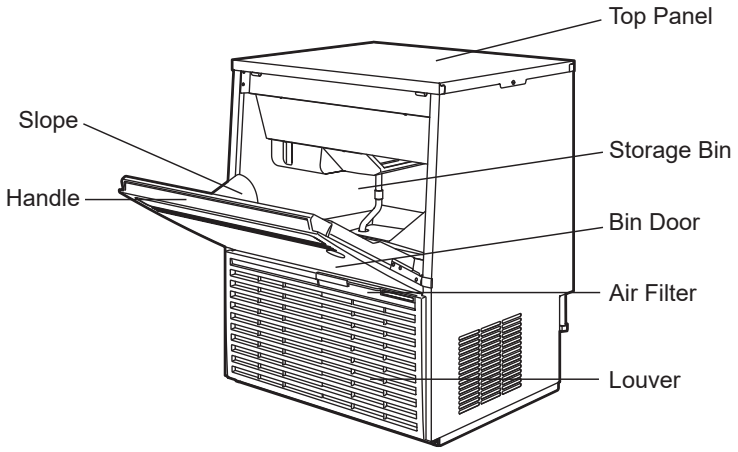

[d] IM-30CA

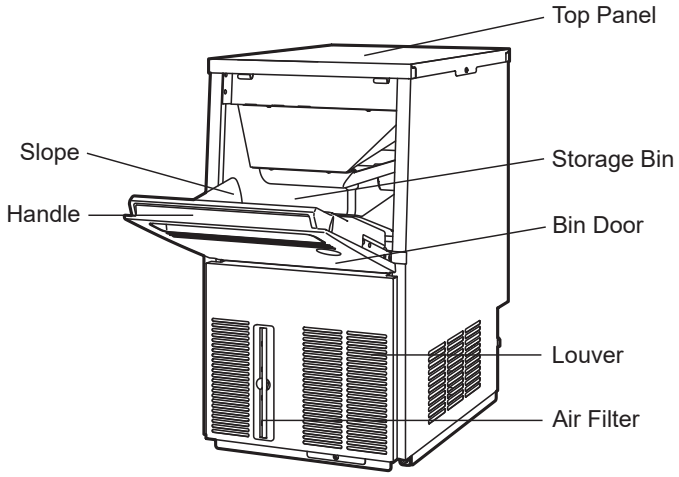

2. CONTROLLER BOARD

Note: Refer to the controller board service manual.

IMPORTANT

If receiving a service call, ask the user to turn off the power to the icemaker and turn it on again, while watching the icemaker. This will reset the controller, and in some cases normal operation will resume.

NOTICE

1. Check that the icemaker has been earthed properly. If not, the controller board will not work properly.

2. Do not change wiring and connections, or the controller board will not work properly.

3. Do not touch the reverse side of the controller board and tiny electronic devices on it.

4. Do not repair the electronic devices and parts on the controller board in the field (except for fuse replacement). Replace the whole board assembly when it fails.

5. To get static free, always touch the metal part of the icemaker before servicing. Electrostatic discharge will cause severe damage to the controller board.

6. The signal ground wire must be connected to the control box when replacing the controller board after service.

7. The controller board is fragile. Handle with care.

   * Do not drop the board on the floor.

   * Make sure that the board is placed correctly into the guides in the control box. Mis-alignment could cause breakage when replacing the control box cover.

   * Handle the board by the edges only. Do not touch the electric parts and devices.

[a] CONTROLLER BOARD LAYOUT

Main Board [IM-220AA, IM-220AWA, IM-100A, IM-130A]

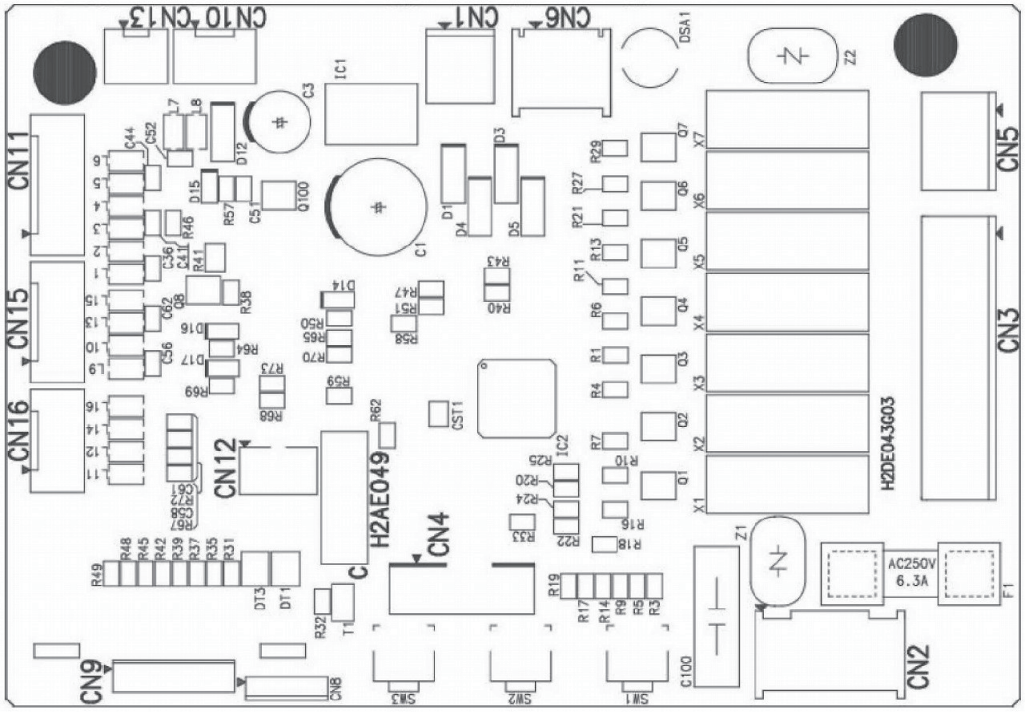

Main Board [IM-65A, IM-45CA, IM-35CA]

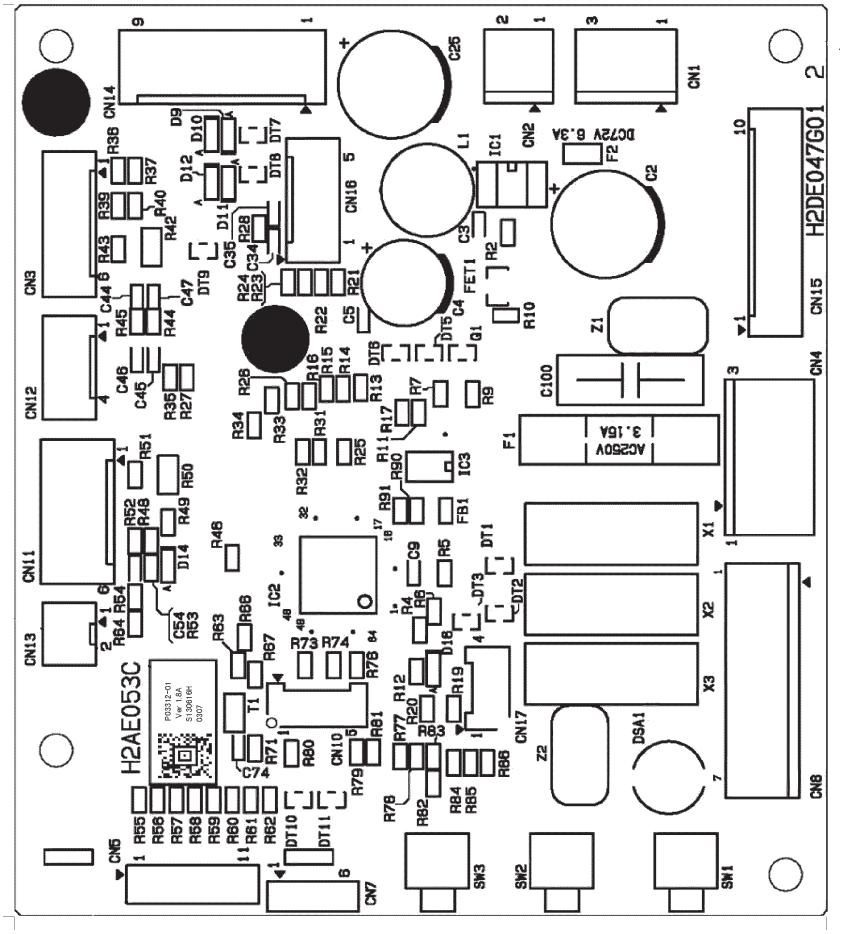

Sub Board

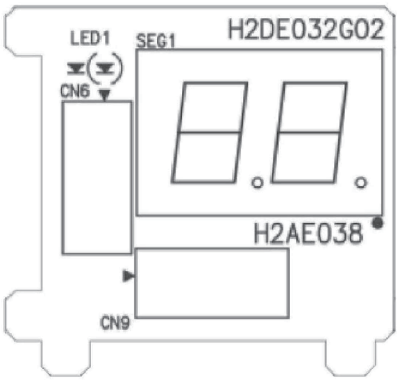

Combination

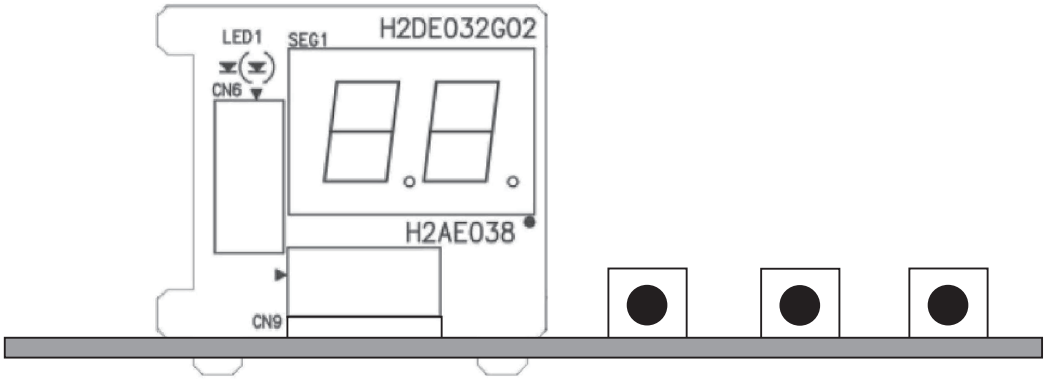

[b] INPUT/OUTPUT LAYOUT

[IM-220AA, IM-220AWA, IM-100A, IM-130A]

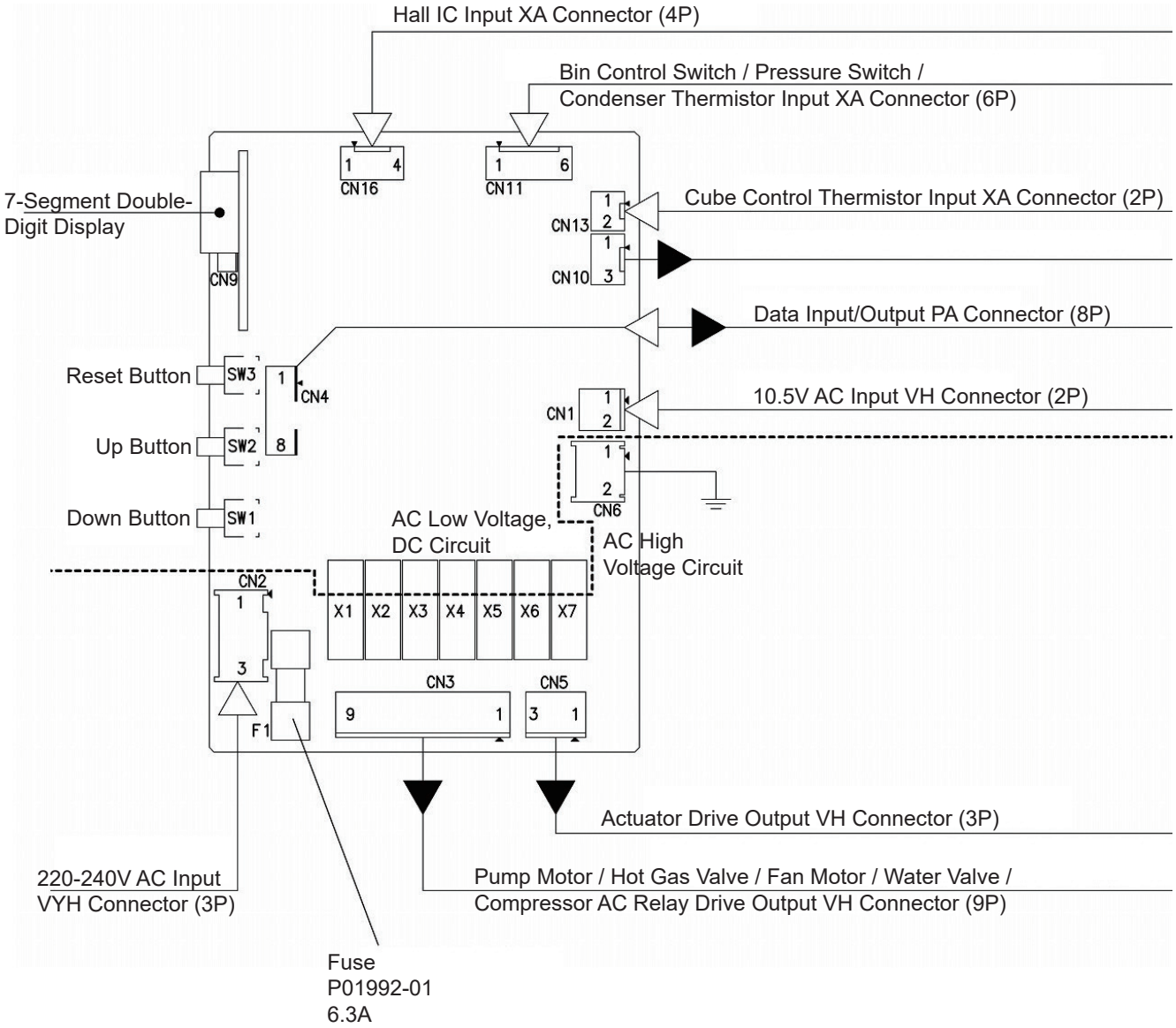

[IM-65A, IM-45CA, IM-35CA]

*1: not in use

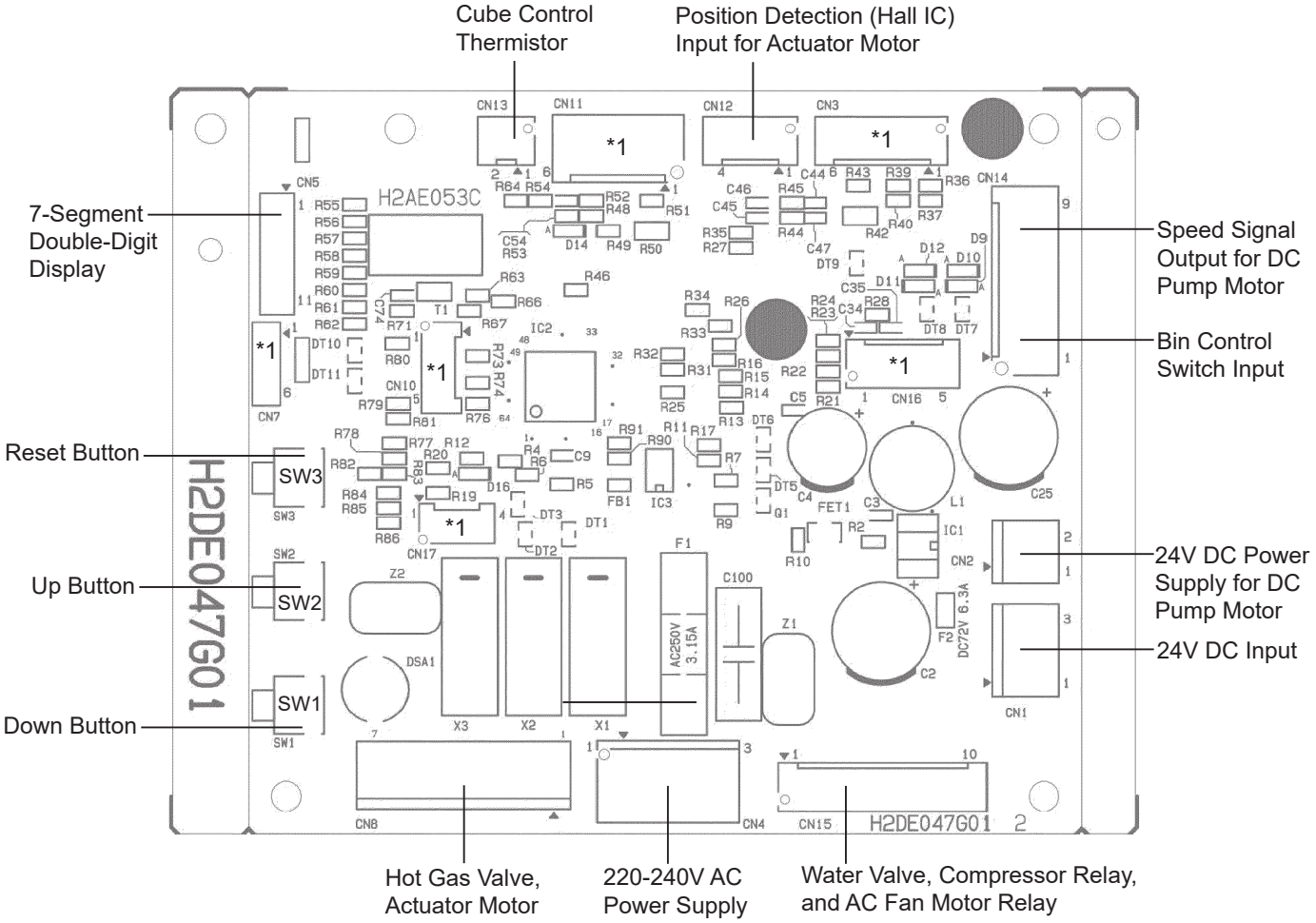

[c] BEFORE CHECKING CONTROLLER BOARD

Check the power source voltage and the components as shown in the table below.

Component	Procedure	Normal
1. Thermistor (on evaporator) 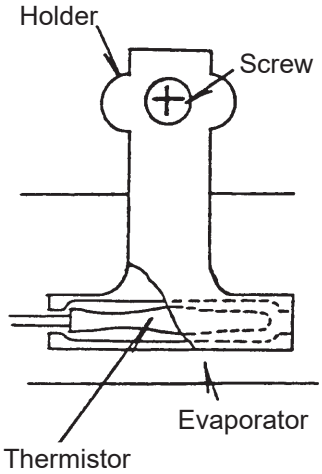 	**NOTICE** Thermistor sensor part is fragile, glass sealed. Handle with care. * Disconnect the connector CN13 on the board. * Remove the screw and the thermistor holder on the evaporator. * Immerse the sensor part in a glass containing ice and water for 5 minutes. * Check the resistance between CN13 connector pins. * Replace the thermistor in its correct position. * Connect CN13.	5 -7 kilohms
2. Bin Control Switch	Manually set the micro switch in the TRIP and RESET positions, and check the period.	Approx. TRIP(Closed) 10 sec. RESET(Open) 80 sec.

III. OPERATING INSTRUCTIONS

⚠ WARNING

The use of any electrical equipment involves the observance of some fundamental rules. In particular:

* Instances of high humidity and moisture increase the risk of electrical short circuits and potential electrical shocks. If in doubt, disconnect the icemaker.
* Do not damage the power cord or pull it in order to disconnect the icemaker from the electrical supply network.
* Do not touch the electrical parts or operate the switches with damp hands.
* This appliance is not intended for use by persons (including children) with reduced physical, sensory or mental capabilities, or lack of experience and knowledge, unless they have been given supervision or instruction concerning use of the appliance by a person responsible for their safety.
* Young children should be supervised to ensure that they do not play with the appliance.
* Do not attempt to modify the icemaker. Only qualified personnel may disassemble or repair the appliance.

⚠ CAUTION

Do not step into the storage bin, or put your hands into the back of the storage bin or the baffle on top of the storage bin. Ice may drop off the icemaker, a hard block of ice may suddenly break down, or the icemaking mechanism may suddenly move, resulting in injury.

NOTICE

1. All parts are factory-adjusted. Improper adjustments may result in failure.

2. If the unit is turned off, wait for at least 3 minutes before restarting the icemaker to prevent damage to the compressor.

⚠ HYGIENE

This icemaker is designed to produce and store edible ice. To keep the icemaker hygienic:

* Wash your hands before removing ice. Use the plastic scoop provided (bin accessory).
* The storage bin is for ice use only. Do not store anything else in the bin nor use other electrical appliances in the bin.
* Clean the storage bin before use (see “IV. 1. PERIODICAL CLEANING”).

* Keep the scoop clean. Clean it by using a neutral cleaner and rinse thoroughly.
* Close the door after removing ice to prevent entrance of dirt, dust or insects into the storage bin.

1. START UP

1) Disconnect the power supply.

2) Open the water tap.

3) Connect the power supply and energise.

4) The following should occur in sequence:
   a) Hot gas valve will open.
   b) Compressor will start.
   c) Water pan will fully open.
   d) Water valve will open.
   e) Water pan will start to close (hot gas valve closed).
   f) Water pan fully closed - pump motor will start.
   g) Water valve will close.

2. PREPARING THE ICEMAKER FOR LONG STORAGE

⚠ WARNING

Drain the icemaker to prevent damage to the water supply line at subfreezing temperatures, using air or carbon dioxide. Shut off the icemaker until proper air temperature is resumed.

[IM-65A, IM-45CA, IM-30CA]

1) Close the water supply tap, and remove the inlet hose.

2) Remove the front panel.

3) Push the reset switch. The water pan will start to open.

4) Blow out the water supply line immediately after the water pan has opened.

Note: This procedure is necessary to protect the icemaker from freezing up at subfreezing temperature.

5) Unplug the icemaker or disconnect the power source when the water pan has fully opened.

6) Remove all ice from the storage bin, and clean the bin.

7) Replace the front panel in its correct position.

8) Replace the inlet hose in its correct position.

[IM-220AA, IM-220AWA, IM-100A, IM-130A]

1) Close the water supply tap, and remove the inlet hose.

2) Remove the front panel.

3) Remove the screw located on the front of the water tank.

4) Move the tank drain pipe to the drain position. See Fig. 1.

5) Push the reset switch. The water pan will start to open.

6) Blow out the water supply line immediately after the water pan has opened.

Note: This procedure is necessary to protect the icemaker from freezing up at subfreezing temperature.

7) Unplug the icemaker or disconnect the power source when the water pan has fully opened.

8) Move the tank drain pipe to the normal position, and secure it with the screw.

9) Remove all ice from the storage bin, and clean the bin.

10) Replace the front panel in its correct position.

11) Replace the inlet hose in its correct position.

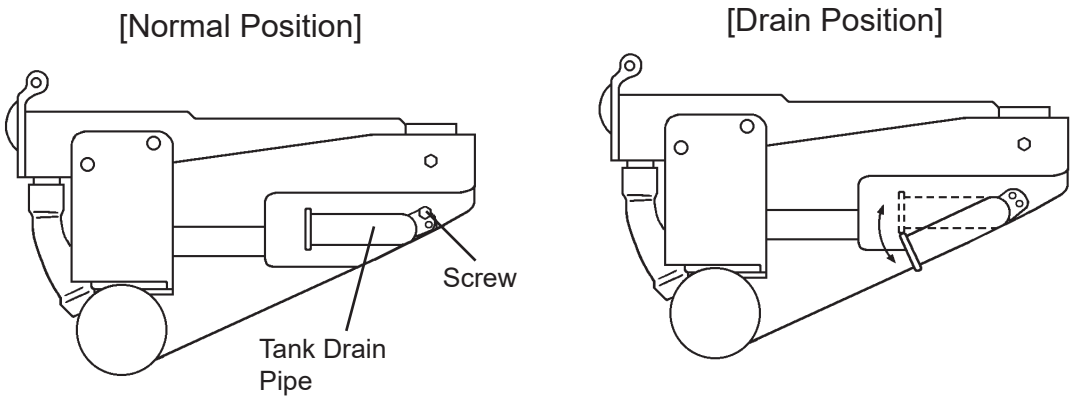

Fig. 1

3. BIN CONTROL

Bin control switch is mounted on the upper side of the storage bin. This switch will turn off the unit automatically when the storage bin is full of ice.
Handle the bin control switch carefully, because the switch assembly is fragile. Especially on removing ice, do not touch or poke with a scoop.
Keep away from the water plate or drain pan to prevent jamming.

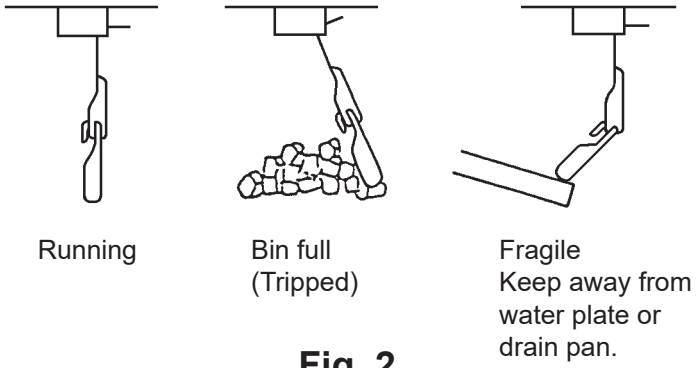

Fig. 2

[a] BIN CONTROL SWITCH ASSEMBLY

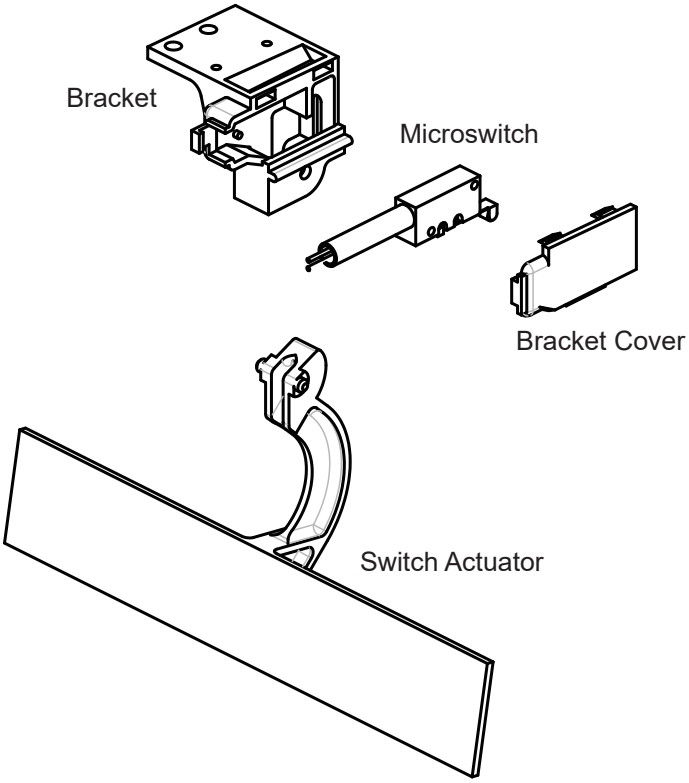

Fig. 3

[b] REMOVAL

BRACKET COVER

Push the two pawls and remove the bracket cover.

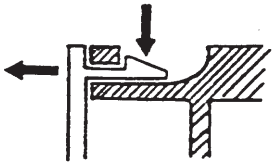

SWITCH

Pull out the switch, holding the rubber leads cap. Handle with care.

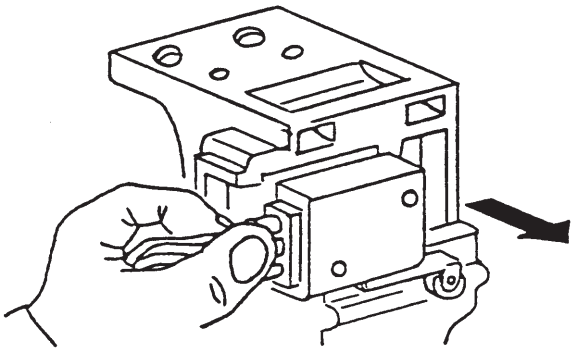

SWITCH ACTUATOR

Insert a flat blade screwdriver and wrench it slightly to pull out the switch actuator. Handle with care to prevent damage to the cam surface of the actuator.

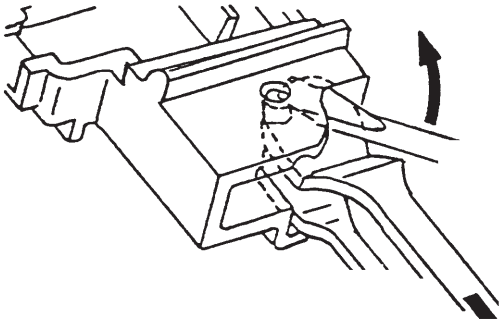

[c] REASSEMBLING

SWITCH ACTUATOR

Insert the lower shaft and push it along the U notch. Check that the switch actuator moves free.

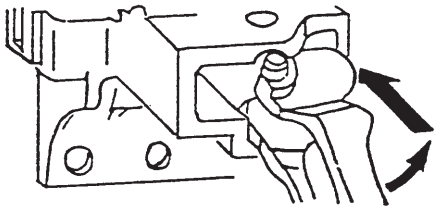

SWITCH & BRACKET COVER

Place the switch lever first, and then attach the switch in position. Insert the guide and push the bracket cover to lock.

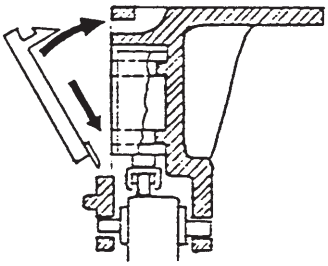

Fig. 4

IV. MAINTENANCE INSTRUCTIONS

⚠ WARNING

1. Before carrying out any cleaning or maintenance operations, unplug the icemaker from the electrical supply network.

2. This appliance must not be cleaned by use of a water jet.

⚠ CAUTION

Before handling or using cleaning solutions, check the guidelines on the product for advice on suitable personal protective clothing, gloves, goggles, etc.

NOTICE

1. Clean and sanitize the icemaker water system at least twice a year, and check and clean the condenser at least once a year.

2. To prevent possible damage, do not clean the plastic parts with water above 40°C or in a dishwasher.

1. PERIODICAL CLEANING

[1] Machine and Bin Exterior

Wipe the exterior at least once per week with a clean, soft cloth. Use a damp cloth containing a neutral cleaner to wipe off grease or dirt.

[2] Scoop and Storage Bin Handle Cleaning/Sanitisation (Daily)

1) Either mix 3 litres of water with 11 ml of 5.25% sodium hypochlorite solution in a suitable container, or the recommended Hoshizaki sanitiser as directed.

2) Soak the scoop in the solution for more than 3 minutes. Rinse thoroughly, and shake to remove surplus liquid.

   Note: Using a cloth to dry may re-contaminate.

3) Use a neutral cleaner to wash the storage bin handle. Rinse thoroughly.

4) Soak a clean cloth with the sanitising solution, and wipe the handle. Use fresh water and a clean cloth to rinse/dry.

[3] Storage Bin Interior Cleaning/Sanitisation (Weekly)

1) Open the storage bin door, and remove all ice.

   Note: Hoshizaki recommends various types of storage bin for the icemaker which vary in size and design. The following instructions are therefore for general guidance only.

2) Wash the bin liner, ice deflector and door inner surface with a neutral non-abrasive cleaner. Rinse thoroughly with a clean cloth and fresh water.

3) Either mix 5 litres of water with 18 ml of 5.25% sodium hypochlorite solution in a suitable container, or the recommended Hoshizaki sanitiser as directed.

4) Soak a clean sponge or cloth with the solution, and wipe the bin liner, ice deflector and door inner surface.

5) Rinse thoroughly with fresh water and a clean cloth to wipe off the solution. Close the bin door.

   Note: Some solutions may cause damage to the bin liner surfaces or corrosion on the metal parts. Always rinse the sanitiser unless directed otherwise by Hoshizaki guidelines.

[4] Air Filter

Plastic mesh air filters remove dirt or dust from the air, and keep the condenser from getting clogged. If the filters get clogged, the icemaker's performance will be reduced. Remove and clean the air filters at least twice per month:

1) Slide the air filter off the louver.

2) Clean the air filter by using a vacuum cleaner. When severely clogged, use warm water and a neutral cleaner to wash the air filter.

3) Rinse and dry the air filter thoroughly, and place it in position.

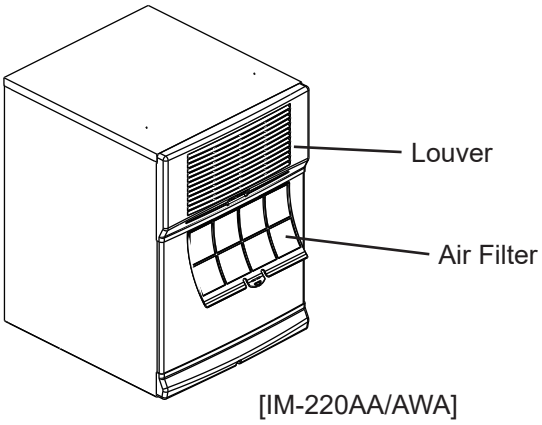

Fig. 5a

NOTICE

After cleaning, be sure to place the air filter back in position.

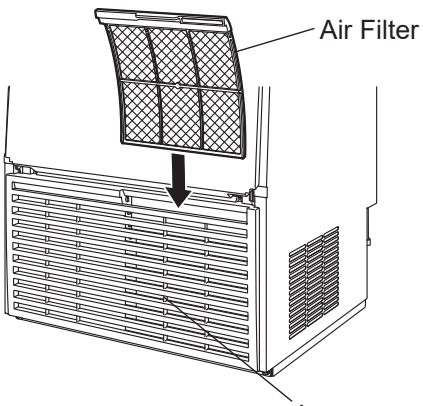

[IM-100A/130A/65A/45CA]

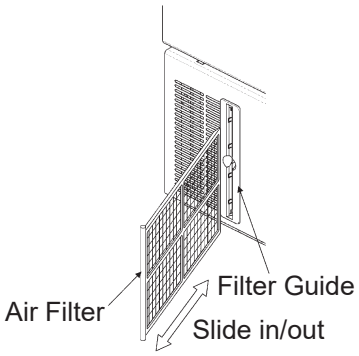

[IM-30CA]

Fig. 5b

2. WATER VALVE

1) Unplug the icemaker or disconnect the power source.

2) Close the water supply tap.

3) Remove the top panel and front panel.

4) Disconnect the inlet hose from the water valve.

5) Remove the mesh filter from the water valve.

6) Clean the mesh using a brush.

7) Replace the mesh and inlet hose in their correct positions.

8) Open the shut-off valve.

9) Plug in the icemaker or connect the power source.

10) Check for leaks.

11) Replace the panels in their correct positions.

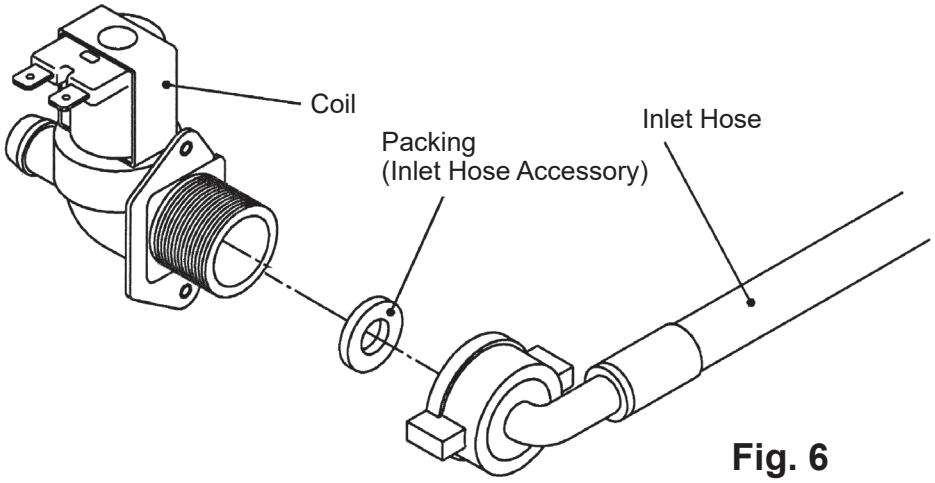

Fig. 6

3. ICEMAKING WATER SYSTEM

To keep the icemaker hygienic, clean and sanitize the icemaking water system at least once every six months. More frequent cleaning and sanitizing may be required depending on the water quality.

⚠ CAUTION

Always wear rubber gloves, eye protectors, apron, etc. for safe handling of the cleaner and sanitizer.

NOTICE

1. Use the cleaners and sanitizers recommended by Hoshizaki. Contact your local Hoshizaki office for further details. (The instructions below give an example of those recommended cleaners and sanitizers.)
2. Never mix cleaning and sanitizing solutions in an attempt to shorten cleaning time.
3. Wipe off any splashed or spilt cleaner/sanitizer immediately.
4. Do not use any ammonia type cleaners on any part of the icemaker.
5. When the ambient and water temperatures are 10°C or below, the water pan may remain open. Warm the icemaking compartment up to 20°C around the thermistor.
6. Be sure to follow the cleaning and sanitizing instructions below.

1) Use a suitable container to dilute 236 ml of the cleaner (“Nickel-Safe Ice Machine Cleaner” by The Rectorseal Corporation) with 11.4 lit. of water.

2) Open the storage bin door, and remove all the ice to avoid contaminating by the cleaner.

3) Remove the front and top panels.

4) If the icemaker is in a defrost cycle, wait until a freeze cycle starts.

5) Close the water supply tap.

6) Remove the screw, and move the tank drain pipe to the drain position. See Fig. 1.

7) Push the reset switch to open the water pan.

8) Unplug the icemaker or disconnect the power source when the water pan has fully opened.

9) After the water has completely drained out, plug in the icemaker or connect the power source. When the 7-segment display on the controller board turns on, press SW1 on the controller board for 3 seconds to start the flush mode. (See the controller board service manual for further details.)

10) When the flush mode has started, pour the cleaning solution prepared in 1) carefully into the water tank within 60 seconds before the pump motor starts. Do not splash or spill the solution onto the other parts.

11) Circulate the cleaning solution for 30 minutes. Push the reset switch to open the water pan. Unplug the icemaker or disconnect the power source when the water pan has fully opened. Wait until the cleaning solution has completely drained out.

12) Open the water supply tap, and repeat the above step 9). Since the water supply tap is open this time, water is supplied as in the normal freeze cycle.

13) When the water pan closes again, pour clean water into the water pan until it floods from the overflow pipe, and circulate the water for 5 minutes.

14) Push the reset switch to open the water pan and drain the water. This time the water does not drain out completely.

15) Repeat the above steps 13) and 14) at least three times to rinse thoroughly. To drain the rinse water completely, unplug the icemaker or disconnect the power source when the water pan has fully opened.

SANITIZING INSTRUCTIONS

Note: Sanitizing should always be completed after cleaning or alternately as an individual procedure if conditions exist to make it necessary.

16) Use a suitable container to dilute 44 ml of 5.25% sodium hypochlorite solution with 11.4 lit. of water.

* Alternatively use the Hoshizaki recommended sanitizer as directed by the relevant instructions.

17) Close the water supply tap. Plug in the icemaker or connect the power source. When the 7-segment display on the controller board turns on, press SW1 on the controller board for 3 seconds to start the flush mode.

18) When the flush mode has started, pour the cleaning solution prepared in 16) carefully into the water tank within 60 seconds before the pump motor starts. Do not splash or spill the solution onto the other parts.

19) Circulate the sanitizing solution for 15 minutes. Push the reset switch to open the water pan. Unplug the icemaker or disconnect the power source when the water pan has fully opened. Wait until the sanitizing solution has completely drained out.

20) Open the water supply tap, and repeat the above step 9). Since the water supply tap is open this time, water is supplied as in the normal freeze cycle.

21) When the water pan closes again, pour clean water into the water pan until it floods from the overflow pipe, and circulate the water for 5 minutes.

22) Push the reset switch to open the water pan and drain the water. This time the water does not drain out completely.

23) Repeat the above steps 21) and 22) at least three times to rinse thoroughly. To drain the rinse water completely, unplug the icemaker or disconnect the power source when the water pan has fully opened.

24) Move the tank drain pipe to the normal position, and secure it with the screw. See Fig. 1.

25) Plug in the icemaker or connect the power source. Check for proper icemaking operation.

26) Replace the front panel and top panel in their correct positions.

27) Complete storage bin cleaning as detailed in IV. 1. [3].

V. TECHNICAL INFORMATION

1. WATER CIRCUIT AND REFRIGERANT CIRCUIT

[IM-220AA, IM-220AWA, IM-100A, IM-130A]

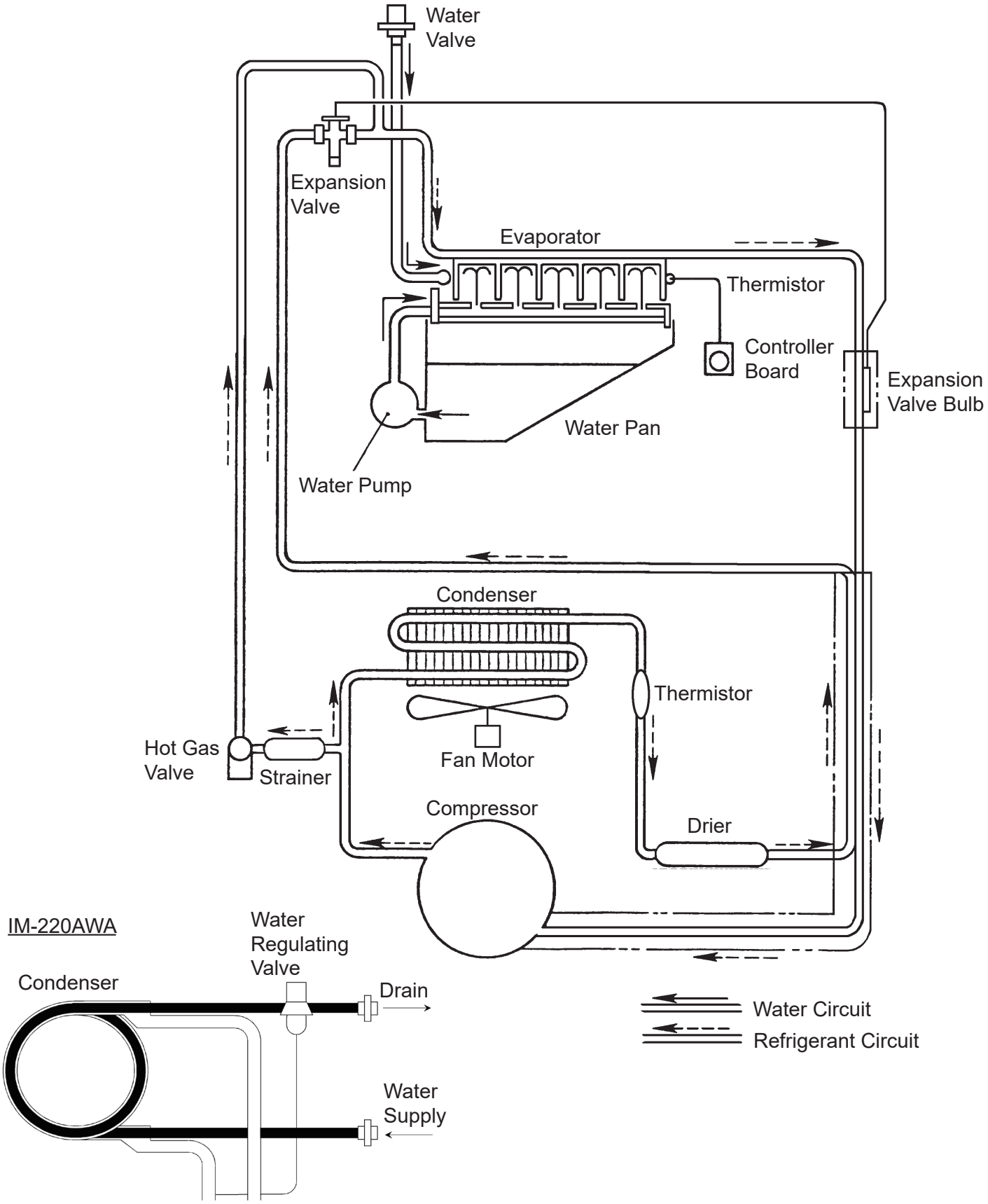

[IM-65A, IM-45CA, IM-30CA]

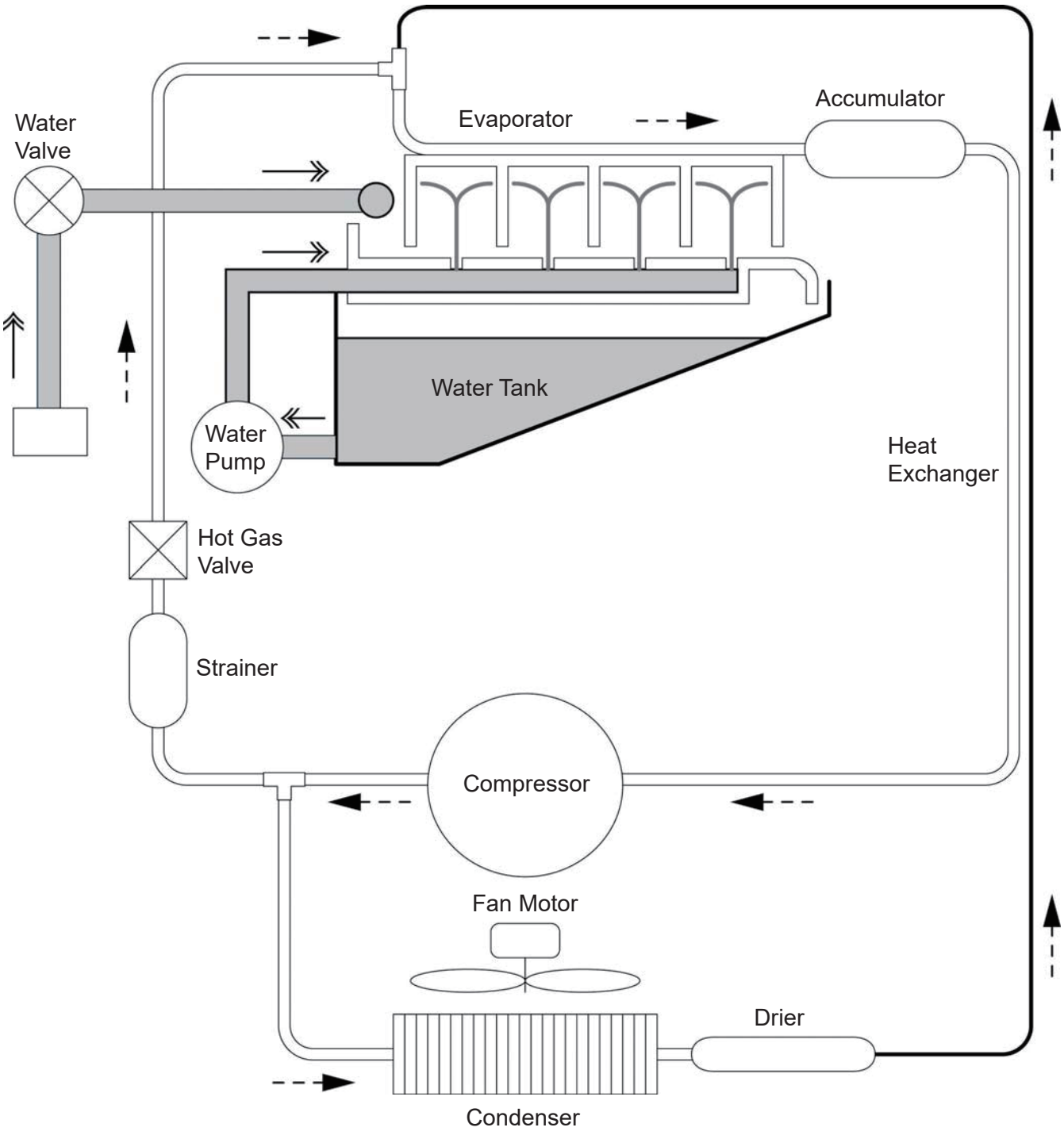

2. WIRING DIAGRAM

[a] IM-220AA, IM-220AWA

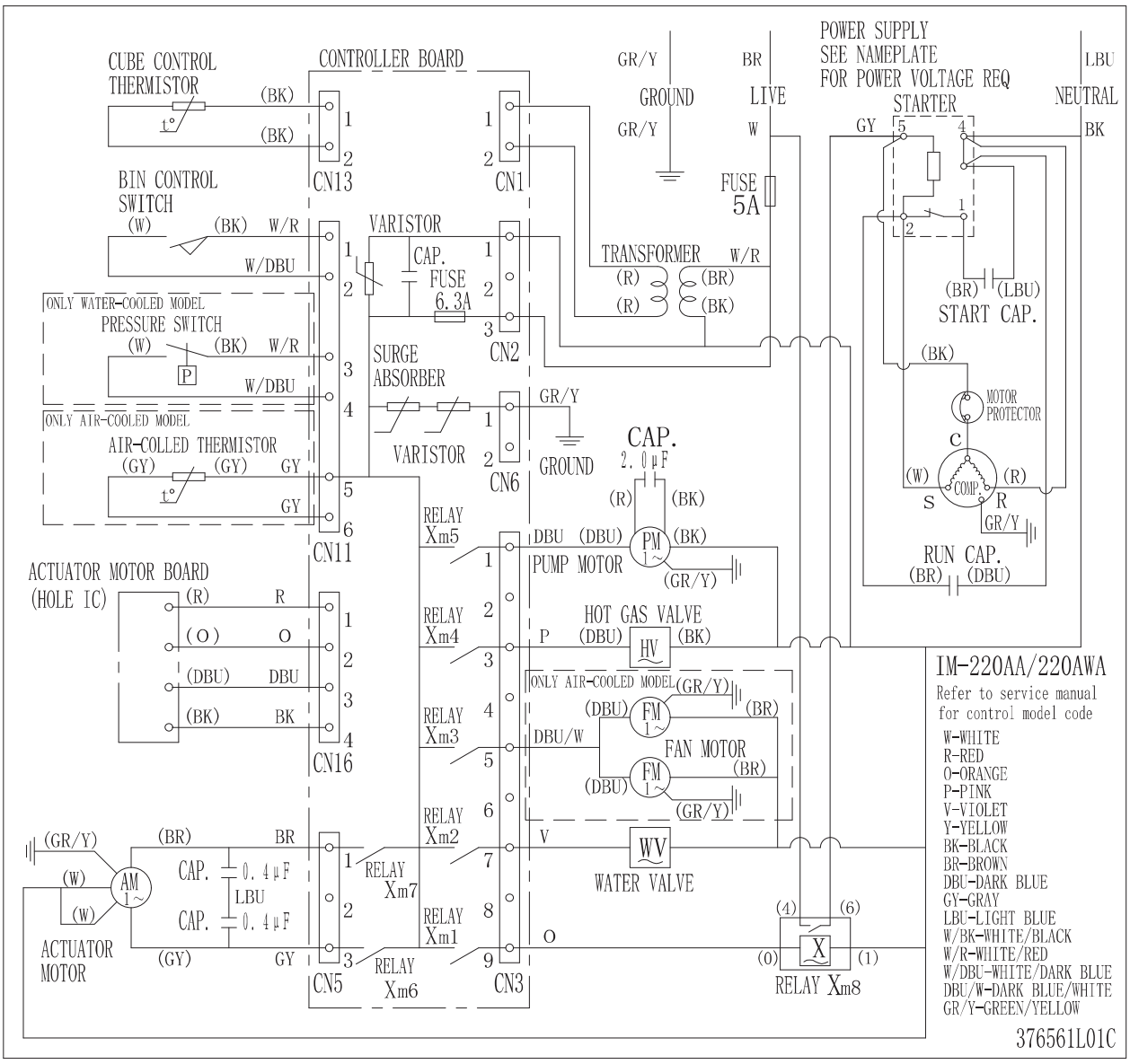

[b] IM-100A

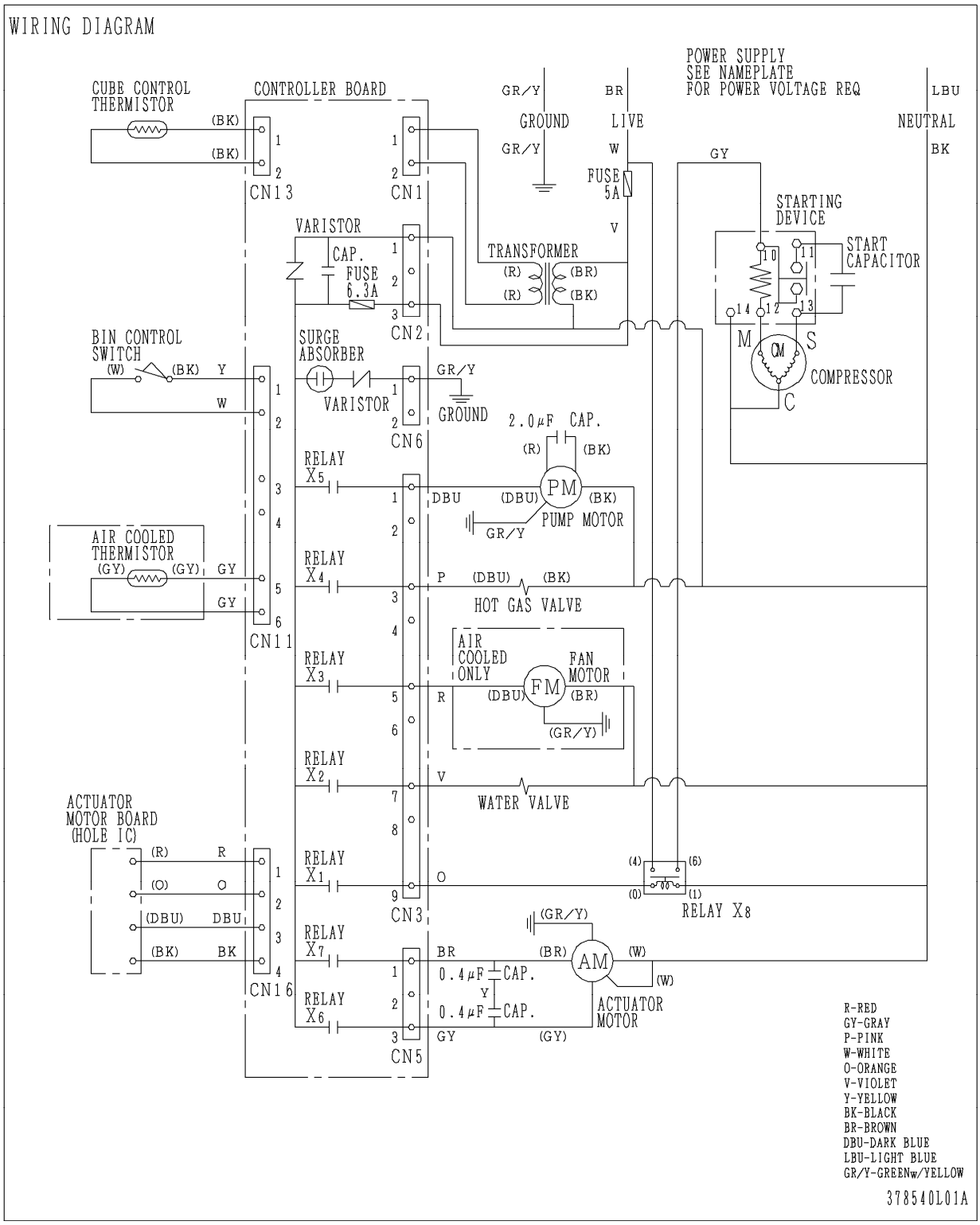
WIRING DIAGRAM
CUBE CONTROL THERMISTOR
CONTROLLER BOARD
CN13
CN1
GROUND
LIVE
NEUTRAL
POWER SUPPLY SEE NAMEPLATE FOR POWER VOLTAGE REQ
FUSE 5A
STARTING DEVICE
START CAPACITOR
COMPRESSOR
VARISTOR
CAP.
FUSE 6.3A
TRANSFORMER
CN2
BIN CONTROL SWITCH
SURGE ABSORBER
VARISTOR
CN6
2.0μF CAP.
RELAY X5
PUMP MOTOR
AIR COOLED THERMISTOR
CN11
RELAY X4
HOT GAS VALVE
AIR COOLED ONLY
FAN MOTOR
RELAY X3
RELAY X2
WATER VALVE
ACTUATOR MOTOR BOARD (HOLE IC)
CN16
RELAY X1
RELAY X8
CN3
RELAY X7
0.4μF CAP.
ACTUATOR MOTOR
RELAY X6
CN5
R-RED
GY-GRAY
P-PINK
W-WHITE
O-ORANGE
V-VIOLET
Y-YELLOW
BK-BLACK
BR-BROWN
DBU-DARK BLUE
LBU-LIGHT BLUE
GR/Y-GREENw/YELLOW
378540L01A

[c] IM-130A

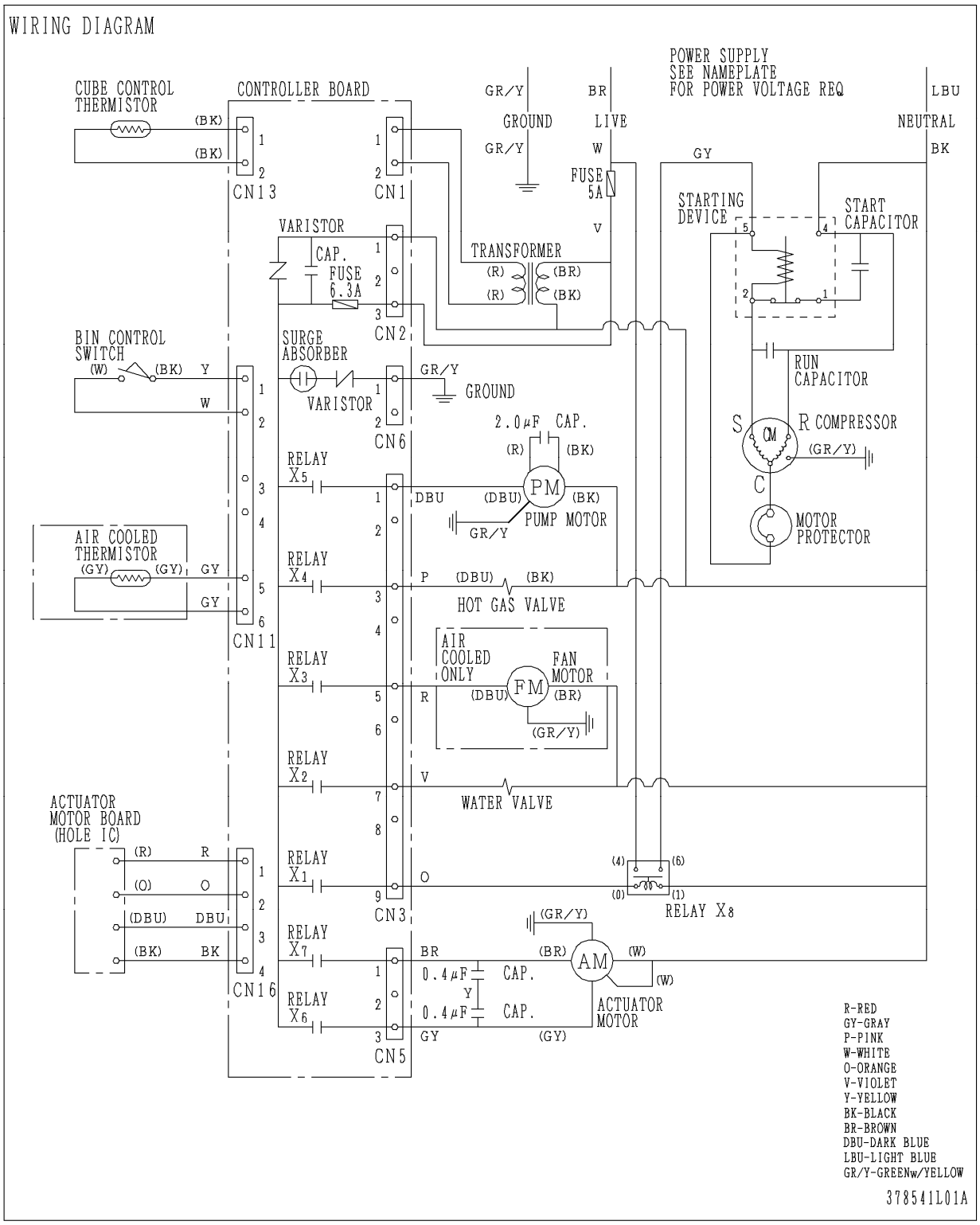
WIRING DIAGRAM
CUBE CONTROL THERMISTOR
CONTROLLER BOARD
CN13
CN1
CN2
CN6
CN11
CN3
CN16
CN5
VARISTOR
CAP.
FUSE 6.3A
SURGE ABSORBER
VARISTOR
BIN CONTROL SWITCH
AIR COOLED THERMISTOR
ACTUATOR MOTOR BOARD (HOLE IC)
GROUND
LIVE
FUSE 5A
TRANSFORMER
POWER SUPPLY SEE NAMEPLATE FOR POWER VOLTAGE REQ
NEUTRAL
STARTING DEVICE
START CAPACITOR
RUN CAPACITOR
COMPRESSOR
MOTOR PROTECTOR
2.0μF CAP.
PUMP MOTOR
HOT GAS VALVE
AIR COOLED ONLY
FAN MOTOR
WATER VALVE
RELAY X8
0.4μF CAP.
ACTUATOR MOTOR
RELAY X5
RELAY X4
RELAY X3
RELAY X2
RELAY X1
RELAY X7
RELAY X6
R-RED
GY-GRAY
P-PINK
W-WHITE
O-ORANGE
V-VIOLET
Y-YELLOW
BK-BLACK
BR-BROWN
DBU-DARK BLUE
LBU-LIGHT BLUE
GR/Y-GREENw/YELLOW
378541L01A

[d] IM-65A [Jiaxipera compressor: auxiliary code H0 and earlier]

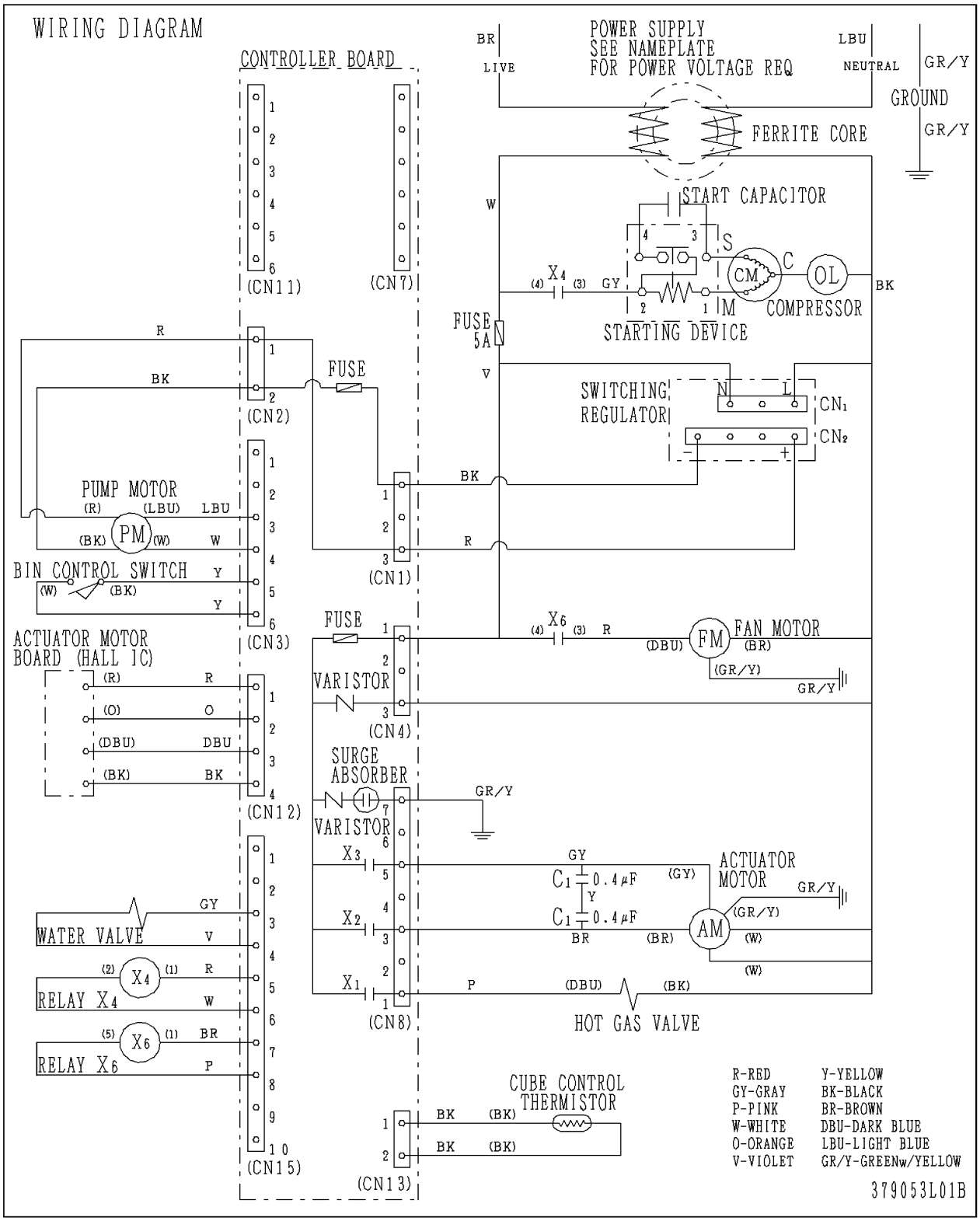

[e] IM-65A [Secop compressor: auxiliary code H1 and later]

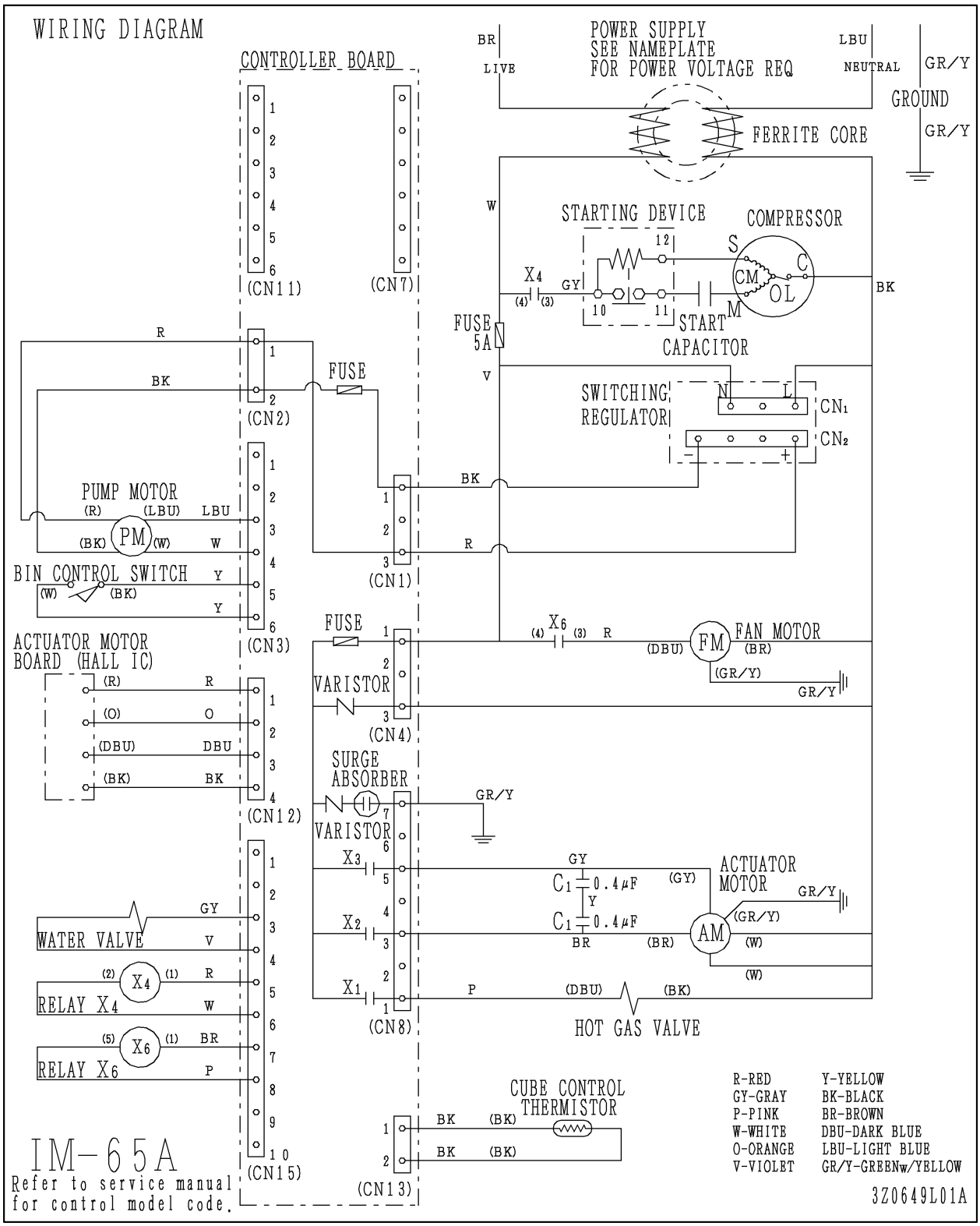

[f] IM-45CA

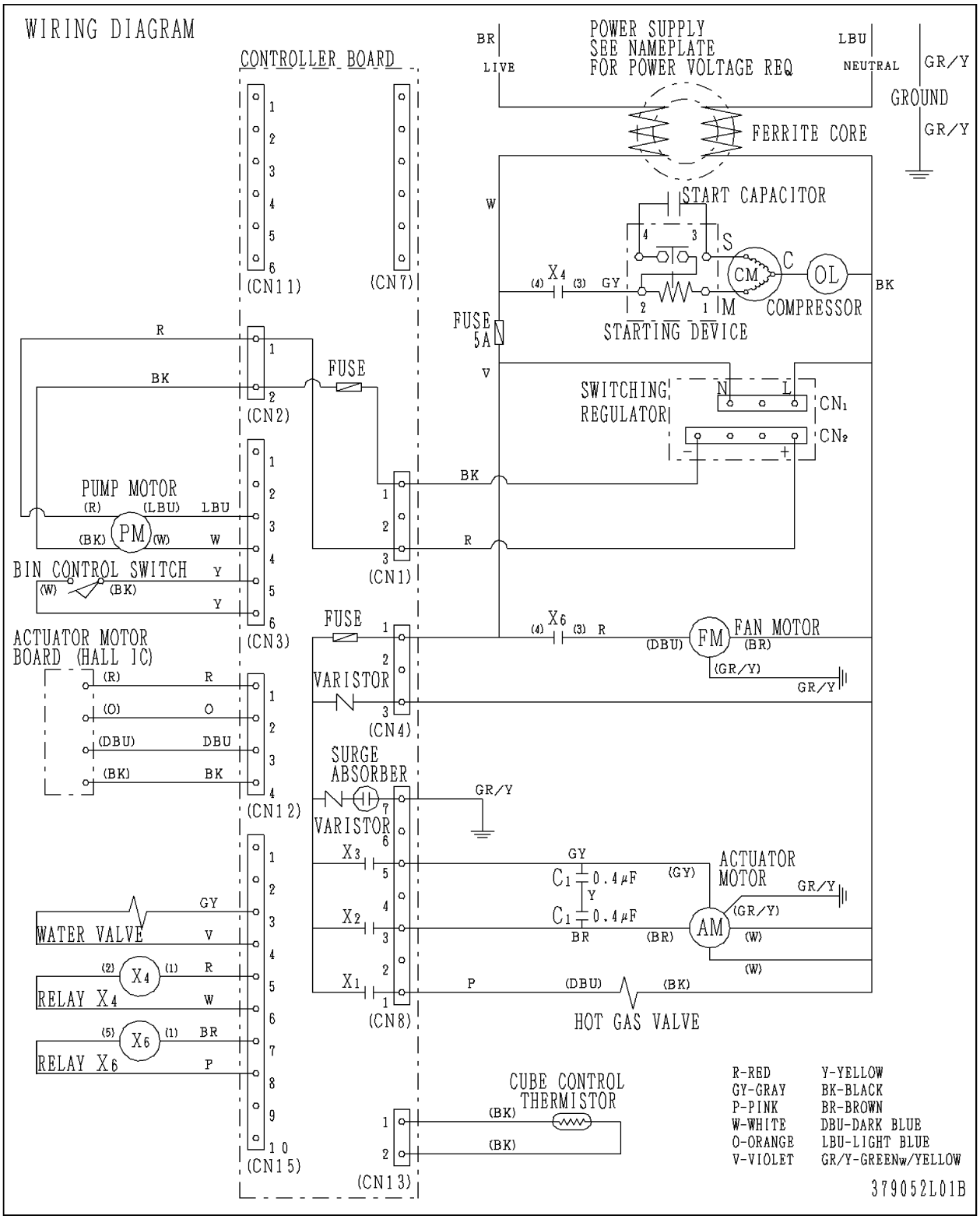
WIRING DIAGRAM
CONTROLLER BOARD
POWER SUPPLY
SEE NAMEPLATE
FOR POWER VOLTAGE REQ
BR
LIVE
LBU
NEUTRAL
GR/Y
GROUND
FERRITE CORE
START CAPACITOR
COMPRESSOR
STARTING DEVICE
FUSE 5A
FUSE
SWITCHING REGULATOR
PUMP MOTOR
BIN CONTROL SWITCH
ACTUATOR MOTOR BOARD (HALL IC)
VARISTOR
SURGE ABSORBER
FAN MOTOR
ACTUATOR MOTOR
WATER VALVE
RELAY X4
RELAY X6
HOT GAS VALVE
CUBE CONTROL THERMISTOR
(CN11)
(CN7)
(CN2)
(CN1)
(CN3)
(CN12)
(CN4)
(CN8)
(CN15)
(CN13)
R-RED
GY-GRAY
P-PINK
W-WHITE
O-ORANGE
V-VIOLET
Y-YELLOW
BK-BLACK
BR-BROWN
DBU-DARK BLUE
LBU-LIGHT BLUE
GR/Y-GREENw/YELLOW
379052L01B

[g] IM-30CA

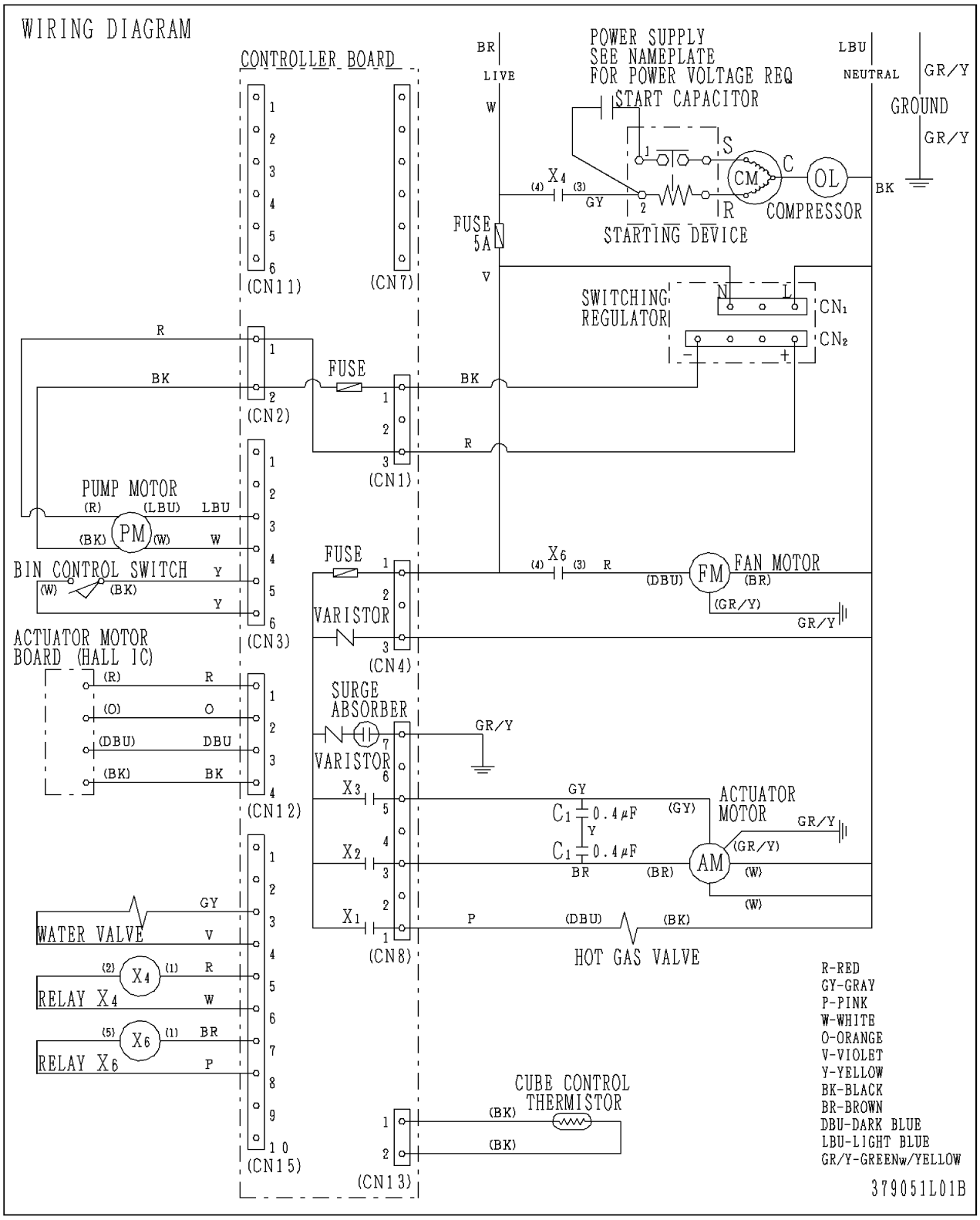
WIRING DIAGRAM
CONTROLLER BOARD
POWER SUPPLY
SEE NAMEPLATE
FOR POWER VOLTAGE REQ
START CAPACITOR
LIVE
NEUTRAL
GROUND
COMPRESSOR
STARTING DEVICE
FUSE 5A
SWITCHING REGULATOR
(CN11)
(CN7)
(CN2)
(CN1)
(CN3)
(CN4)
(CN12)
(CN8)
(CN15)
(CN13)
PUMP MOTOR
BIN CONTROL SWITCH
ACTUATOR MOTOR BOARD (HALL IC)
FAN MOTOR
VARISTOR
SURGE ABSORBER
ACTUATOR MOTOR
HOT GAS VALVE
WATER VALVE
RELAY X4
RELAY X6
CUBE CONTROL THERMISTOR
R-RED
GY-GRAY
P-PINK
W-WHITE
O-ORANGE
V-VIOLET
Y-YELLOW
BK-BLACK
BR-BROWN
DBU-DARK BLUE
LBU-LIGHT BLUE
GR/Y-GREENw/YELLOW
379051L01B

3. PERFORMANCE DATA

Model	Ambient Temp.	(˚C)	10	21	32	38
	Water Temp.	(˚C)	10	15	21	32
IM-220AA	Ice Production	(kg/d)	190	180	160	130
	Freeze Cycle Time	(min)	17.0	23.2	26.7	33.4
	Defrost Cycle Time	(min)	7.3	3.9	2.1	2.0
	Water Consumption	(lit/h)	25.9	12.8	11.4	9.3
	Electric Consumption	(W)	840	910	950	1050
	Head Pressure [peak]	(bar)	13	16	21	23
	Suction Pressure	(bar)	1.3	1.7	1.9	2.2
	Evaporator Inlet Temp.	(˚C)	-2.4	-18	-20	-15
IM-220AWA	Ice Production	(kg/d)	200	185	160	130
	Freeze Cycle Time	(min)	20.2	22.3	26.3	32.8
	Defrost Cycle Time	(min)	2.8	2.5	2.5	2.4
	Icemaking Water Consumption	(lit/h)	10.5	10.0	8.8	6.6
	Condensing Water Consumption	(lit/h)	31.7	38.8	50.8	81.3
	Electric Consumption	(W)	830	830	870	880
	Head Pressure [peak]	(bar)	20	20	21	21
	Suction Pressure	(bar)	1.8	1.9	2.0	2.0
	Evaporator Inlet Temp.	(˚C)	-21	-21	-19	-19
IM-100A	Ice Production	(kg/d)	100	98	81	68
	Freeze Cycle Time	(min)	20.3	25.0	31.7	35.9
	Defrost Cycle Time	(min)	7.0	3.3	2.5	1.9
	Water Consumption	(lit/h)	17.1	8.8	7.1	5.9
	Electric Consumption	(W)	600	640	680	750
	Head Pressure [peak]	(bar)	12	16	20	23
	Suction Pressure	(bar)	1.5	1.7	1.8	1.8
	Evaporator Inlet Temp.	(˚C)	-23	-21	-20	-19
IM-130A	Ice Production	(kg/d)	120	116	90	72
	Freeze Cycle Time	(min)	16.5	20.0	28.0	34.7
	Defrost Cycle Time	(min)	6.0	3.0	2.5	1.9
	Water Consumption	(lit/h)	20.1	10.4	7.9	6.7
	Electric Consumption	(W)	515	555	630	680
	Head Pressure [peak]	(bar)	12	16	21	24
	Suction Pressure	(bar)	1.3	1.5	1.6	1.8
	Evaporator Inlet Temp.	(˚C)	-22	-20	-21	-19
IM-65CA	Ice Production	(kg/d)	65	56	45	39
	Freeze Cycle Time	(min)	18.3	23.2	29.9	34.3
	Defrost Cycle Time	(min)	4.1	2.9	2.1	2.2
	Water Consumption	(lit/h)	8.3	5.8	4.8	4.2
	Electric Consumption	(W)	335	360	395	455
	Head Pressure [peak]	(bar)	5.2	7.5	11	14
	Suction Pressure	(bar)	0.1	0.2	0.3	0.4
	Evaporator Inlet Temp.	(˚C)	-22	-21	-19	-15

IM-45CA	Ice Production	(kg/d)	45	43	34	31
	Freeze Cycle Time	(min)	16.8	19.9	26.5	30.5
	Defrost Cycle Time	(min)	4.0	2.7	1.9	2
	Water Consumption	(lit/h)	8.2	7.8	4.0	3.7
	Electric Consumption	(W)	265	285	370	342
	Head Pressure [peak]	(bar)	6	9	13	16
	Suction Pressure	(bar)	-0.1	0.1	0.2	0.3
	Evaporator Inlet Temp.	(˚C)	-21	-20	-17	-20
IM-30CA	Ice Production	(kg/d)	27	25	21	23
	Freeze Cycle Time	(min)	15.4	17.9	22.6	22.8
	Defrost Cycle Time	(min)	4.4	3.0	3.0	2
	Water Consumption	(lit/h)	18.9	3.9	2.7	2.9
	Electric Consumption	(W)	215	230	250	250
	Head Pressure [peak]	(bar)	5	7	11	13
	Suction Pressure	(bar)	-0.2	-0.1	0	0.1
	Evaporator Inlet Temp.	(˚C)	-26	-25	-21	-21

Note: The above data are only for reference in servicing. Actual readings may be slightly different for each product.
Ice Production = Capacity when shipped from factory
Head Pressure = Maximum pressure of freeze cycle
Suction Pressure = Pressure at the end of freezing cycle
Evaporator Inlet Temp. = Temp. at end of freezing cycle

VI. SERVICE DIAGNOSIS

1. ERROR CODE INDICATION

* See the controller board service manual for detailed diagnosis and remedies.

* The error and caution codes other than E1 and E2 are indicated as “EE” in the 7-segment display at the time of occurrence. But the error history is recorded as the actual error codes in parenthesis, and a maximum of five errors are indicated from the latest entry.

Error	Item	Description	Operation	Reset
E1	Freeze error	Freeze backup timer (45/60 minutes) counts up before freeze cycle completes, and evaporator temperature is 0°C or higher.	Shut down	Press reset switch
E2	Defrost error	Defrost backup timer (30 minutes) counts up before defrost cycle completes.	Shut down	Press reset switch
EE (E3)	Water pan opening error	Water pan has not fully opened within 60 seconds, and 3 minutes have passed even with opening failure control.	Halt	Press reset switch
		Unit resumes operation after 60 minutes and repeats the above error.	Shut down	
EE (E4)	Water pan closing error	Water pan has not fully closed within 60 seconds, and 3 minutes have passed even with closing failure control.	Halt	Press reset switch
		Unit resumes operation after 60 minutes and repeats the above error.	Shut down	
EE (E5)	High temperature error	Evaporator temperature stays 58/59°C or higher for 5 seconds or more.	Shut down	Press reset switch
EE (E8)	Pump motor lock error	Pump motor is locked for 30 seconds while control pressure is applied.	Keep running with no load	Press reset switch
		Above error has been detected 3 times.	Shut down	
EE (E9)	Condenser thermistor error	Condenser thermistor circuit is open or shorted for 2 seconds.	Shut down	Replace thermistor
EE (EA)	Data error	Model setting data memory IC is defective.	Shut down	Replace controller board
EE (EC)	Cube control thermistor error	Cube control thermistor circuit is open or shorted for 2 seconds.	Shut down	Replace thermistor

Caution	Item	Description	Operation	Reset
EE (C1)	Low water detection	If pump motor reaches target RPM within certain period of time after startup, a defrost cycle (water pan opens and closes) runs. If the above occurs again, C1 appears.	Shut down	After 30 minutes, automatically resets and restarts
EE (C2)	High pressure	[Air-cooled] Condenser thermistor senses 58/59°C or higher temperature. [Water-cooled] Pressure switch senses 2.65MPa or higher pressure.	Compressor stops	After 10 minutes, condensing temperature 50°C or lower, pressure 1.96MPa or lower

2. NO ERROR CODE INDICATION

Problem	Check	Possible Cause	Remedy
Icemaker will not start.	Power source	Turned off.	Turn on.
		Supply voltage too low.	Remove cause
		Power failure	Wait until power is resumed.
	Transformer	Defective.	Replace.
	Power cord	Not connected properly.	Reconnect.
		Open circuit (damaged).	Replace.
	Controller board	Defective.	Replace.
	Fuse	Blown out.	Check for cause. Replace.
	Bin control switch	Stuck on other parts (e.g. ice guide).	Remove ice.
		Short circuit (display shows “on”).	Replace.
Slab does not break into separate cubes.	Extension spring	Over-extended.	Replace.
	Water plate	Obstacle caught between evaporator and water plate.	Remove obstacle.
Icemaker will not stop when bin is filled with ice.	Bin control switch actuator	Out of position.	Place in position.
		Broken.	Replace.
	Bin control switch	Out of position.	Place in position.
		Broken.	Replace.
	Bin control switch detector	Out of position.	Place in position.
		Broken.	Replace.
	Bin control micro switch	Disconnected from switch box.	Reconnect.
		Seizing with open contacts.	Replace.
	Controller board	Defective.	Replace.
Cloudy cubes.	Water quality	High hardness.	Set hard water control.
			Switch to full drain flush (see note below).
	Ice condition	Slush ice.	Set slush ice control.
Abnormal noise	Pump motor	Bearing worn out.	Replace.
		Vapor lock.	Clean water valve filter.
			Check water supply cycle time setting.
	Fan motor	Bearing worn out.	Replace.
		Fan touching obstacle.	Remove obstacle.
	Actuator motor	Gear worn out.	Replace.
Cubes drop separately.	Refrigeration circuit	Gas leaks (long defrost cycle).	Repair.
	Cam arm	Worn out.	Replace.

Note:

Full drain flush - After a freeze cycle ends, the unit drains all the remaining water in the tank and refills the tank in the next freeze cycle.

Partial drain flush (default setting) - After a freeze cycle ends, the unit leaves the remaining water in the tank and adds some water to fill the tank in the next freeze cycle.

Problem	Check	Possible Cause	Remedy
Imperfect ice production.	Insufficient water supply	Water valve filter clogged.	Clean.
		Water supply cycle too short.	Extend.
		Water supply pressure too low.	Remove cause.
	Water leaks from water tank or water plate	Water tank broken.	Replace.
		Water plate broken.	Replace.
		Icemaker not level.	Adjust.
	Water valve	Water leaks from valve body.	Replace.
		Water leaks from water supply pipe joint.	Check hose clamp.
			Replace connection hose.
	Water plate	Spray holes clogged.	Unclog.
	Pump motor	Defective.	Replace.
Large-hole cubes.	Refrigeration circuit	Gas leaks (low refrigeration capacity).	Repair.
	Condenser	Not clean (low condensing capacity).	Clean.
		Filter clogged.	Clean.
	Fan motor	Defective.	Replace.
	Installation site	No clearance at right side and rear.	Ensure clearance.
		Ambient temperature above 40°C.	Ensure ventilation to lower temperature.
	Power supply	Supply voltage too low (low refrigeration capacity).	Remove cause.
	Water valve	Water leaks.	Replace.
	Insufficient water supply	Water supply pressure too low.	Remove cause.
Freeze cycle time is too long.	Installation site	Ambient temperature too high.	Ensure ventilation to lower temperature.
	Condenser	Not clean (low condensing capacity).	Clean.
		Filter clogged.	Clean.
	Fan motor	Defective.	Replace.
	Refrigeration circuit	Gas leaks (low refrigeration capacity).	Repair.

VII. ADJUSTMENT

1. FULL DRAIN FLUSH

In some hard water areas, white ice and scaling can be caused. In such case, install a filter or softener, and change the flush mode from “partial drain flush” to “full drain flush” according to the following instructions.

Full drain flush – After a freeze cycle ends, the unit drains all the remaining water in the tank and refills the tank in the next freeze cycle.

Partial drain flush (default setting) – After a freeze cycle ends, the unit leaves the remaining water in the tank and adds some water to fill the tank in the next freeze cycle.

1) Remove the screw located on the front of the water tank. Move the tank drain pipe to the drain position. Secure the tank drain pipe with the screw.

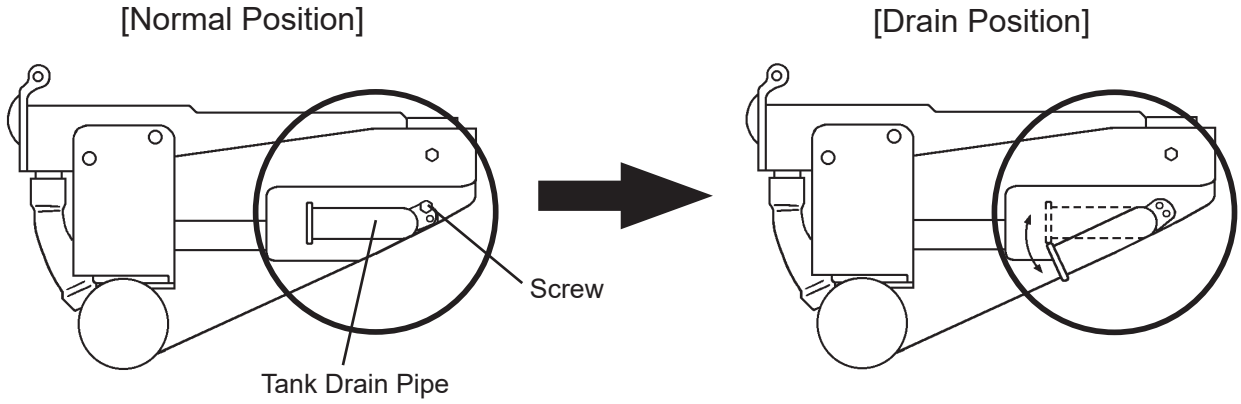

2) Change the following controller board settings from “partial drain flush” to “full drain flush”, referring to “3. [b] MAINTENANCE MODE” in the IM-220AA, IM-220AWA, IM-100A, IM-130A controller board service manual (M028-861).

   Full / partial drain flush selection – Maintenance mode No. 14 (0: full, 1: partial)
   Icemaking water supply time – Maintenance mode No. 12
   Additional icemaking water supply time – Maintenance mode No. 15

2. DIMPLE DIAMETER

See “2. [i] DIMPLE DIAMETER SETTING” in the IM-220AA, IM-220AWA, IM-100A, IM-130A controller board service manual (M028-861).

VIII. REMOVAL AND REPLACEMENT

1. SERVICE FOR REFRIGERANT LINES

[a] SERVICE INFORMATION

1) Allowable Compressor Opening Time and Prevention of Lubricant Mixture [R134a / R404A]

The compressor must not be opened more than 30 minutes in replacement or service. Do not mix lubricants of different compressors even if both are charged with the same refrigerant, except when they use the same lubricant.

2) Treatment for Refrigerant Leak [R134a / R404A]

If a refrigerant leak occurs in the low side of an ice maker, air may be drawn in. Even if the low side pressure is higher than the atmospheric pressure in normal operation, a continuous refrigerant leak will eventually reduce the low side pressure below the atmospheric pressure and will cause air suction. Air contains a large amount of moisture, and ester oil easily absorbs a lot of moisture. If an ice maker charged with R134a / R404A has possibly drawn in air, the drier must be replaced. Be sure to use a drier designed for R134a / R404A.

3) Handling of Handy Flux [R134a / R404A]

Repair of the refrigerant circuit needs brazing. It is no problem to use the same handy flux that has been used for the current refrigerants. However, its entrance into the refrigerant circuit should be avoided as much as possible.

4) Oil for Processing of Copper Tubing [R134a / R404A]

When processing the copper tubing for service, wipe off oil, if any used, by using alcohol or the like. Do not use too much oil or let it into the tubing, as wax contained in the oil will clog the capillary tubing.

5) Service Parts for R134a / R404A

Some parts used for refrigerants other than R134a / R404A are similar to those for R134a / R404A. But never use any parts unless they are specified for R134a / R404A because their endurance against the refrigerant has not been evaluated. Also, for R134a / R404A, do not use any parts that have been used for other refrigerants. Otherwise, wax and chlorine remaining on the parts may adversely affect the R134a / R404A.

6) Replacement Copper Tubing [R134a / R404A]

The copper tubes currently in use are suitable for R134a / R404A. But do not use them if oily inside. The residual oil in copper tubes should be as little as possible. (Low residual oil type copper tubes are used in the shipped units.)

7) Evacuation, Vacuum Pump and Refrigerant Charge [R134a / R404A]

Never allow the oil in the vacuum pump to flow backward. The vacuum level and vacuum pump may be the same as those for the current refrigerants. However, the rubber hose and gauge manifold to be used for evacuation and refrigerant charge should be exclusively for R134a / R404A.

8) Refrigerant Leak Check

Refrigerant leaks can be detected by charging the unit with a little refrigerant, raising the pressure with nitrogen and using an electronic detector. Do not use air or oxygen instead of nitrogen for this purpose, or rise in pressure as well as in temperature may cause R134a / R404A to suddenly react with oxygen and explode. Be sure to use nitrogen to prevent explosion.

[Note] R134a: IM-65A, IM-45CA, IM-30CA
R404A: IM-220AA, IM-220AWA, IM-100A, IM-130A

[b] REFRIGERANT RECOVERY

[IM-65A, IM-45CA, IM-30CA (R134a)]
No refrigerant access valve is provided in the unit. A tap valve should initially be fitted to the low-side process tube and be replaced with a proper access valve (see Fig. 7) when recovery is completed.

[IM-220AA, IM-220AWA, IM-100A, IM-130A (R404A)]
A low-side access valve is provided on an extension pipe connected to the suction port of the compressor. A tap valve should initially be fitted to the high-side process tube and be replaced with a proper access valve (see Fig. 7) when recovery is completed.

[All models]
Recover the refrigerant by using a refrigerant recovery machine (see its instruction manual for proper operation), and store the refrigerant in a proper container. Do not discharge the refrigerant into the atmosphere.

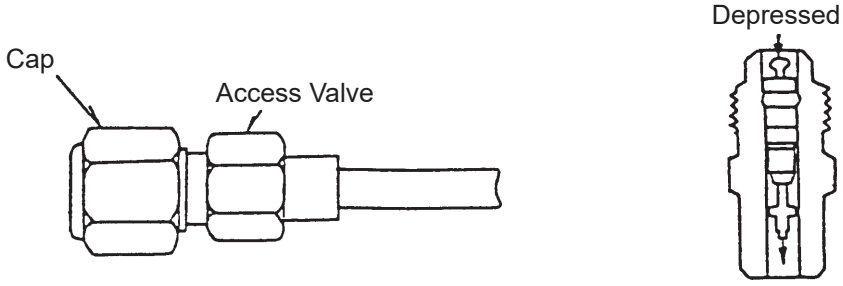

Fig. 7

[c] EVACUATION AND RECHARGE

[IM-65A, IM-45CA, IM-30CA (R134a)]

1) Attach a charging hose of a gauge manifold to a vacuum pump and the low-side access valve.

2) Open the low-side valve on the gauge manifold, and turn on the vacuum pump.

3) Allow the vacuum pump to pull down to a 760 mmHg vacuum. Evacuating period depends on the pump capacity.

4) Close the low-side valve on the gauge manifold.

5) Disconnect the vacuum pump, and attach a refrigerant charging cylinder to accurately weigh in the liquid charge. Remember to purge any air from the charging hose. See the nameplate for the required refrigerant charge.

6) Open the low-side valve on the gauge manifold and the valve on the charging cylinder.

7) When no more refrigerant is drawn in, turn on the icemaker. When the required amount of refrigerant has been charged, close the valve on the charging cylinder and turn off the icemaker.

8) Close the low-side valve on the gauge manifold.

9) Disconnect the charging hose from the access valve. Always cap the access valve to prevent a refrigerant leak.

10) Always thoroughly leak test all joints and valve caps.

11) Avoid charging large quantities of liquid into the low side in case of damage to the compressor.

[IM-220AA, IM-220AWA, IM-100A, IM-130A (R404A)]

1) Attach charging hoses of a gauge manifold to a vacuum pump and the low-side and high-side access valves.

2) Open the low-side and high-side valves on the gauge manifold, and turn on the vacuum pump.

3) Allow the vacuum pump to pull down to a 760 mmHg vacuum. Evacuating period depends on the pump capacity.

4) Close the low-side and high-side valves on the gauge manifold.

5) Disconnect the vacuum pump, and attach a refrigerant charging cylinder to accurately weigh in the liquid charge. Remember to purge any air from the charging hose. See the nameplate for the required refrigerant charge.

6) Open the high-side valve on the gauge manifold and the valve on the charging cylinder.

   Note: Always charge in the liquid stage, as many refrigerants are blends and vapour charging will affect the blend consistency (e.g. R404A).

7) When no more refrigerant is drawn in, turn on the icemaker. When the required amount of refrigerant has been charged, close the valve on the charging cylinder and turn off the icemaker.

8) Close the high-side valve on the gauge manifold.

9) Disconnect the charging hoses from the access valves. Always cap the access valves to prevent a refrigerant leak.

10) Always thoroughly leak test all joints and valve caps.

11) Avoid charging large quantities of liquid into the low side in case of damage to the compressor

2. COMPRESSOR

1) Unplug the icemaker or disconnect the power source.

2) Remove the top, front and right side panels.

3) Recover the refrigerant and store it in a proper container, if required by an applicable law (See “1. [b] REFRIGERANT RECOVERY”).

4) Remove the terminal cover on the compressor, and disconnect solderless terminals.

5) Disconnect the discharge and suction pipes using brazing equipment.

6) Remove the hold-down bolts, washers and rubber grommets.

7) Slide and remove the compressor. Unpack the new compressor package.

8) Attach the rubber grommets of the previous compressor.

9) Clean the suction and discharge pipes with an abrasive cloth/paper.

10) Place the compressor in position, and secure it using the bolts and washers.

11) Remove plugs from the compressor suction and discharge pipes.

12) Braze or solder the access, suction and discharge lines (Do not change this order), with nitrogen gas flowing at the pressure of 0.2 - 0.3 bar.

13) Install the new drier (See “3. DRIER”).

14) Check for leaks using nitrogen gas (10 bar) and soap bubbles.

15) Evacuate the system and charge it with refrigerant (See “1. [c] EVACUATION AND RECHARGE”).

16) Connect the solderless terminals and replace the terminal cover in its correct position.

17) Replace the panels in their correct positions.

18) Plug in the icemaker or connect the power source.

Note: Hoshizaki recommends that compressor starting electrics are always replaced at the same time as the compressor.

3. DRIER

1) Unplug the icemaker or disconnect the power source.

2) Remove the top, front and right side panels.

3) Recover the refrigerant and store it in a proper container, if required by an applicable law (See “1. [b] REFRIGERANT RECOVERY”).

4) Remove the drier holder, if any, and pull the drier toward you for easy service.

5) Remove the drier using brazing equipment.

6) Braze or solder the new drier, with the arrow on the drier in the direction of the refrigerant flow. Use nitrogen gas at the pressure of 0.2 - 0.3 bar when brazing tubings.

7) Check for leaks using nitrogen gas (10 bar) and soap bubbles.

8) Evacuate the system and charge it with refrigerant (See “1. [c] EVACUATION AND RECHARGE”).

9) Replace the panels in their correct positions.

10) Plug in the icemaker or connect the power source.

Note: Always use a drier of the correct capacity and refrigerant type.

4. EXPANSION VALVE

IMPORTANT

Always install a new drier every time the sealed refrigeration system is opened. Do not replace the drier until after all other repair or replacement has been made.

1) Unplug the icemaker or disconnect the power source.

2) Remove the top, front and right side panels.

3) Recover the refrigerant and store it in a proper container, if required by an applicable law (See “1. [b] REFRIGERANT RECOVERY”).

4) Remove the expansion valve using brazing equipment. Protect the evaporator and pipes from excessive heat with damp cloths or similar.

5) Remove the expansion valve sensor (bulb).

6) Remove the drier using brazing equipment.

7) Braze in the new expansion valve. Protect the body of the valve from excessive heat, and use nitrogen at a pressure of 0.2 - 0.3 bar when brazing.

8) Braze or solder the new drier (See “3. DRIER”).

9) Check for leaks using nitrogen gas (10 bar) and soap bubbles.

10) Evacuate the system and charge it with refrigerant (See “1. [c] EVACUATION AND RECHARGE”).

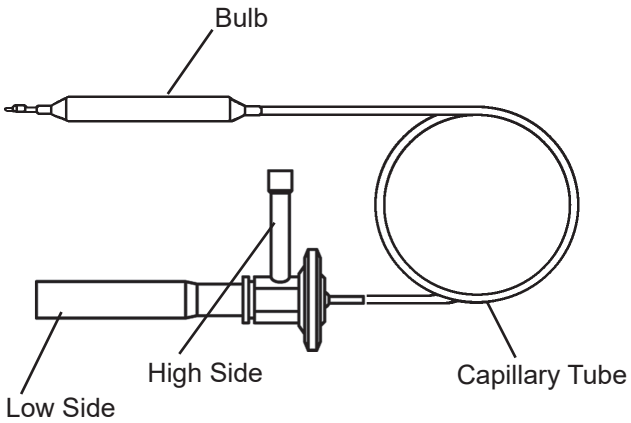

Fig. 8

11) Attach the bulb to the suction line in position. Be sure to secure it using a wire or clamp and replace the insulation.

12) Replace the panels in their correct positions.

13) Plug in the icemaker or connect the power source.

5. EVAPORATOR

IMPORTANT

Always install a new drier every time the sealed refrigeration system is opened. Do not replace the drier until after all other repair or replacement has been made.

1) Unplug the icemaker or disconnect the power source.

2) Remove the top, front, right and left side panels.

3) Recover the refrigerant and store it in a proper container, if required by an applicable law (See “1. [b] REFRIGERANT RECOVERY”).

4) Remove the water pan assembly, referring to “7. WATER PAN ASSEMBLY”.

5) Disconnect the solder connections on the evaporator using brazing equipment. Protect the expansion valve from excessive heat.

6) Remove four nuts holding the evaporator.

7) Install the new evaporator, and secure it with the bolts, collars (spacer) and nuts.

8) Install the new drier (See “3. DRIER”).

9) Braze pipes, with nitrogen gas flowing at the pressure of 0.2 - 0.3 bar.

10) Check for leaks using nitrogen gas (10 bar) and soap bubbles.

11) Evacuate the system and charge it with refrigerant (See “1. [c] EVACUATION AND RECHARGE”).

12) Replace the removed panels in their correct positions.

13) Plug in the icemaker or connect the power source.

6. HOT GAS VALVE

IMPORTANT

Always install a new drier every time the sealed refrigeration system is opened. Do not replace the drier until after all other repair or replacement has been made.

1) Unplug the icemaker or disconnect the power source.

2) Remove the top, front and right side panels.

3) Recover the refrigerant and store it in a proper container, if required by an applicable law (See “1. [b] REFRIGERANT RECOVERY”).

4) Disconnect the hot gas valve leads.

5) Remove the screw and the solenoid coil.

6) Remove the valve and drier using brazing equipment.

7) Braze the new hot gas valve with nitrogen gas flowing at the pressure of 0.2 - 0.3 bar.

⚠ WARNING

Always protect the valve body by using a damp cloth to prevent the valve from overheating. Do not braze with the valve body exceeding 120°C.

8) Install the new drier (See “3. DRIER”).

9) Check for leaks using nitrogen gas (10 bar) and soap bubbles.

10) Evacuate the system and charge it with refrigerant (See “1. [c] EVACUATION AND RECHARGE”).

11) Attach the solenoid coil to the valve body, and secure it with the screw.

12) Connect the leads.

13) Replace the panels in their correct positions.

14) Plug in the icemaker or connect the power source.

7. WATER PAN ASSEMBLY

1) Remove the top, front and left side panels.

2) Push the reset switch on the control box to open the water pan.

3) Unplug the icemaker or disconnect the power source.

4) Disconnect the pump motor leads in the wiring channel.

5) Remove the two extension springs from the cam arms.

6) Remove the water plate bracket and the water pan assembly.

7) Remove the two spring hook screws from the water tank.

8) Remove the screws and the water plate bracket.

9) Remove the pump suction and discharge tubings.

10) Remove the pump motor bracket from the water plate.

11) Install the new water plate or water tank in the reverse order of the removal procedure.

12) Replace the panels in their correct positions.

13) Plug in the icemaker or connect the power source.

[IM-220AA, IM-220AWA, IM-100A, IM-130A]

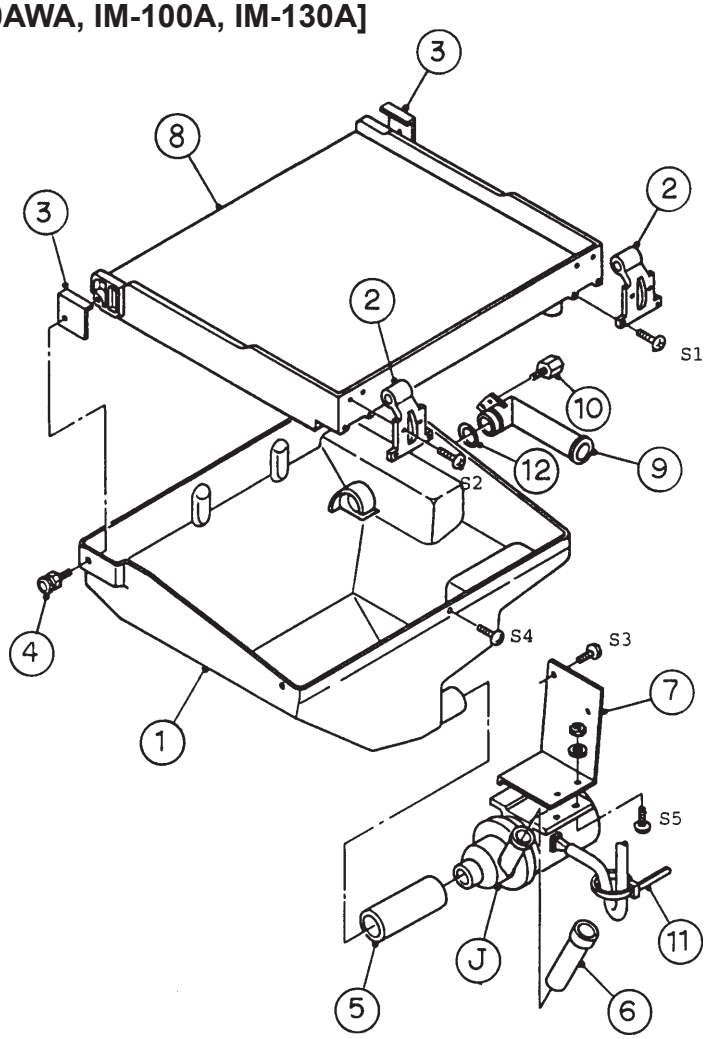

INDEX NO.	DESCRIPTION
1	Water Tank
2	Water Plate Bracket
3	Bracket
4	Spring Hook Screw
5	Pump Tubing (Suction)
6	Pump Tubing (Discharge)
7	Pump Motor Bracket
8	Water Plate
9	Overflow Pipe
10	Thumbscrew (for Overflow Pipe)
11	Nylon Tie
12	O-ring
J	Pump Motor Assembly
S1 - 4	Tapping Screw
S5	Machine Screw

Fig. 9a

[IM-65A, IM-45CA, IM-30CA]

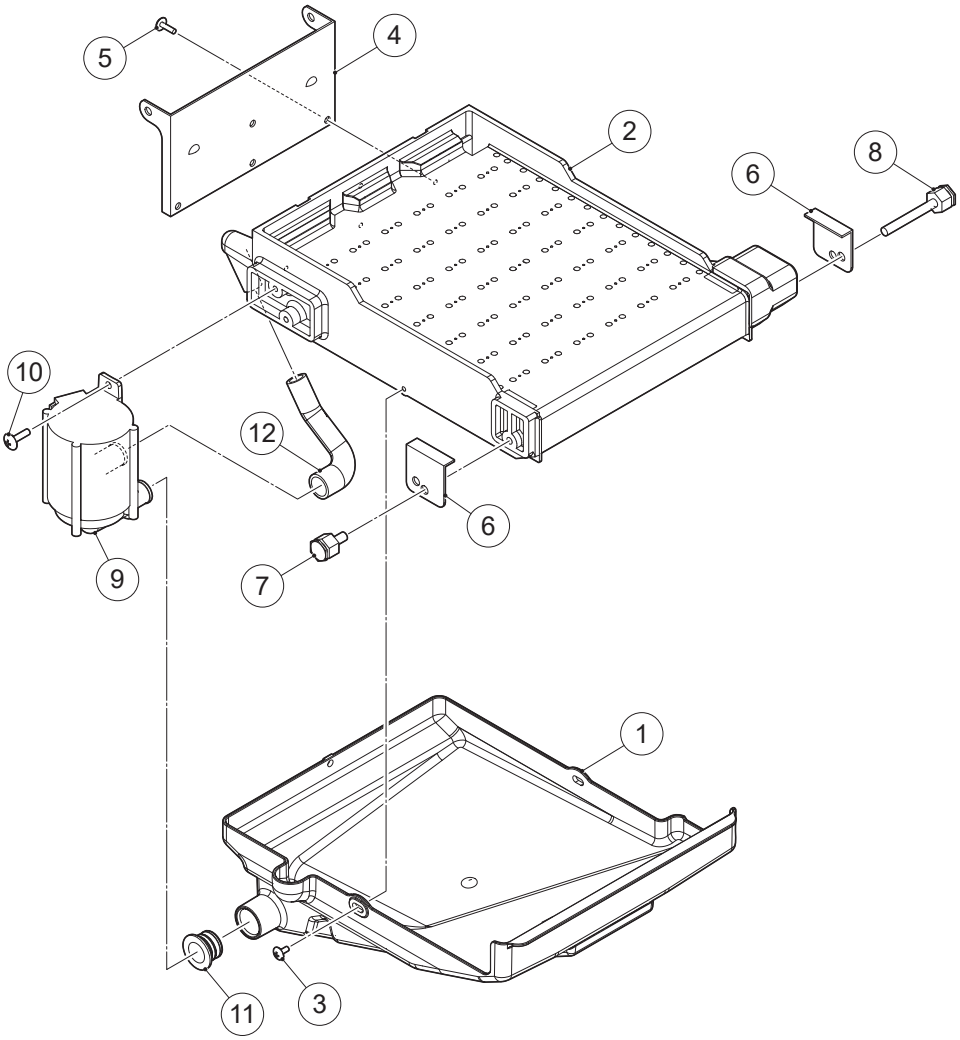

INDEX NO.	DESCRIPTION
1	Water Tank (G)
2	Water Plate (G)
3	T2 Truss Head Screw
4	Bracket - Water Pan
5	Truss Head Tapping Screw T2
6	Plate
7	Screw - Spring Hook (C)
8	Screw - Spring Hook (C)
9	Pump Motor
10	Truss Head Tapping Screw T2
11	Packing - Water
12	Hose (B) - Pump Motor

Fig. 9b

8. PUMP MOTOR

1) Unplug the icemaker or disconnect the power source.

2) Remove the top panel and front panel (IM-220AA, IM-220AWA, IM-100A, IM-130A).
   Remove the top panel (IM-65A, IM-45CA, IM-30CA).

3) Disconnect the pump motor leads in the wiring channel.

4) Unscrew and remove the pump motor from the bracket.

5) Disconnect the pump suction and discharge tubings.

6) Install the new motor in the reverse order of the removal procedure.

7) Plug in the icemaker or connect the power source, and check for leaks.

8) Replace the panels in their correct positions.

9. WATER VALVE

1) Close the water supply tap.

2) Unplug the icemaker or disconnect the power source.

3) Remove the top panel and front panel.

4) Disconnect the receptacle (leads) from the water valve.

5) Remove the valve outlet tubing by releasing the clamp.

6) Remove the inlet hose and water valve.

7) Install the new valve in the reverse order of the removal procedure.

8) Open the water supply tap.

9) Plug in the icemaker or connect the power source.

10) Check for leaks.

11) Replace the panels in their correct positions.

Note: When replacing parts, disassemble as shown in Fig. 6 and replace the defective parts.

10. ACTUATOR MOTOR

1) Remove the top panel and front panel.

2) Push the reset switch on the control box to open the water pan.

3) Unplug the icemaker or disconnect the power source.

4) Remove the extension spring (actuator motor side) from the cam arm.

5) Disconnect the actuator motor leads in the wiring channel.

6) Remove the actuator motor bracket.

7) Remove the spring pin securing the shaft to the cam arm.

8) Remove the actuator motor.

9) Install the new actuator motor in the reverse order of the removal procedure.

10) Check that the cam arm can move in the proper range.

11) Replace the panels in their correct positions.

12) Plug in the icemaker or connect the power source.

11. CAM ARM

[a] CAM ARM (A) - ACTUATOR MOTOR SIDE

Refer to “10. ACTUATOR MOTOR”.

[b] CAM ARM (B) - REAR SIDE

1) Remove the top panel and front panel.

2) Push the reset switch on the control box to open the water pan.

3) Unplug the icemaker or disconnect the power source.

4) Remove the extension spring from the cam arm (B).

5) Remove the split pin from the cam shaft.

6) Remove the cam arm (B).

7) Install the new cam in the reverse order of the removal procedure.

8) Replace the panels in their correct positions.

9) Plug in the icemaker or connect the power source.

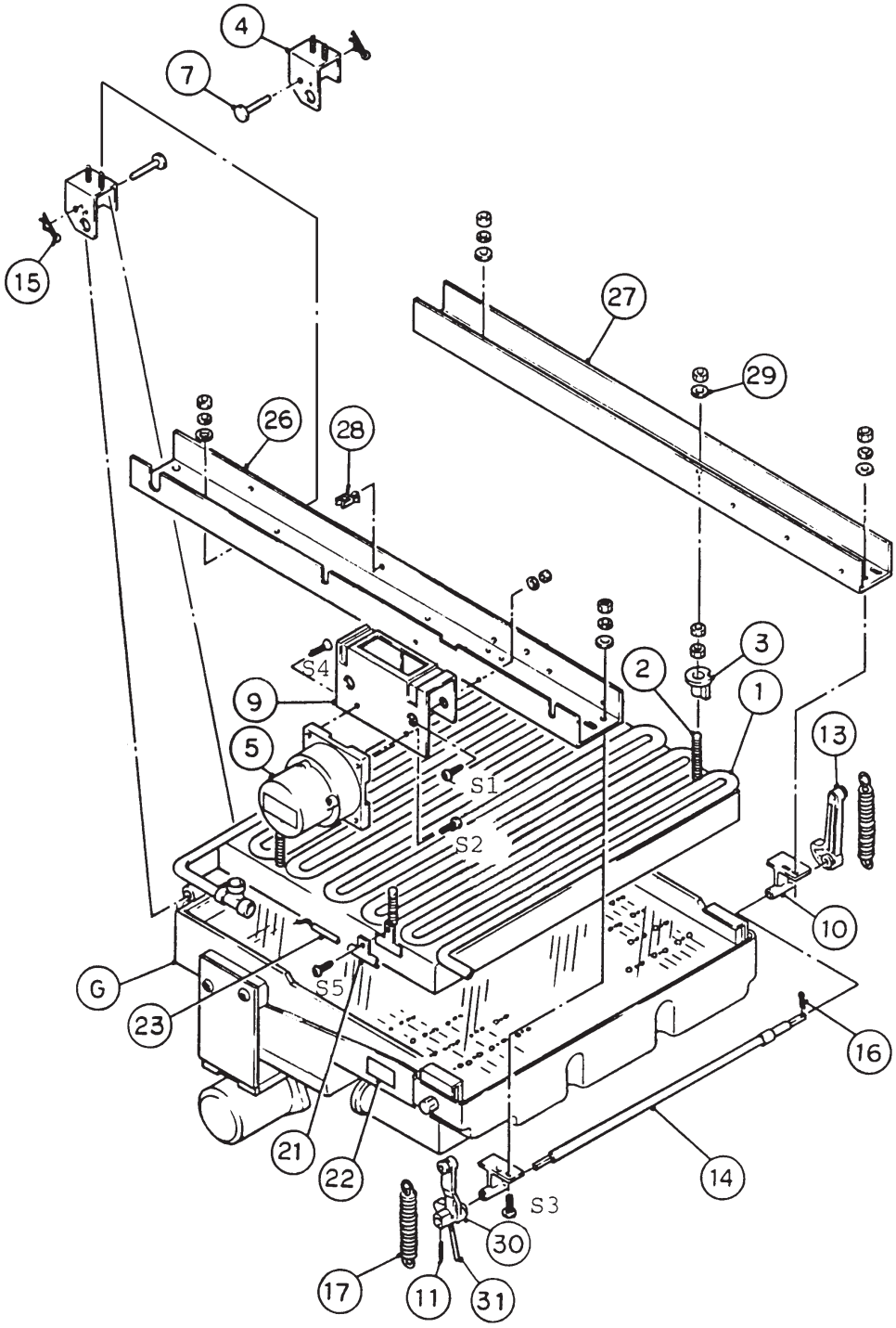

Fig. 10

ICEMAKING ASSEMBLY AND CAM MECHANISM

INDEX NO.	DESCRIPTION
G	Water Pan Assembly
1	Evaporator
2	Bolt
3	Collar (Spacer)
4	Bearing
5	Actuator Motor
7	Shaft
9	Actuator Motor Bracket
10	Cam Shaft Bearing
11	Spring Pin
13	Cam Arm (B)
14	Cam Shaft
15	Snap Pin
16	Split Pin
17	Spring
21	Thermistor Holder
22	Label (for Overflow Pipe)
23	Thermistor (Cube Control)
26	Frame
27	Frame
28	Wire Saddle
29	Washer
30	Cam Arm (A)
31	Change Lever
S1 - 5	Machine Screw

12. CONTROLLER BOARD

IMPORTANT

Some adjustment will be required for the controller board to fit the icemaker models. Do not repair any parts and electronic devices on the controller board in the field. Replace the whole board with a new service board.

1) Unplug the icemaker or disconnect the power source.

2) Remove the front panel and top panel (IM-220AA, IM-220AWA).
   Remove the louver. Unscrew and remove the control box cover (IM-100A, IM-130A, IM-65CA, IM-45CA, IM-30CA).

3) Disconnect all the connectors from the controller board.

4) Remove the controller board from the four board supports for connection to the control box.

5) Install the new controller board in the reverse order of the removal procedure.

6) Replace the front panel and top panel in their correct positions.

7) Plug in the icemaker or connect the power source.

8) The icemaker restarts in the model setting mode. Set the model code according to the controller board service manual.

[IM-220AA, IM-220AWA]

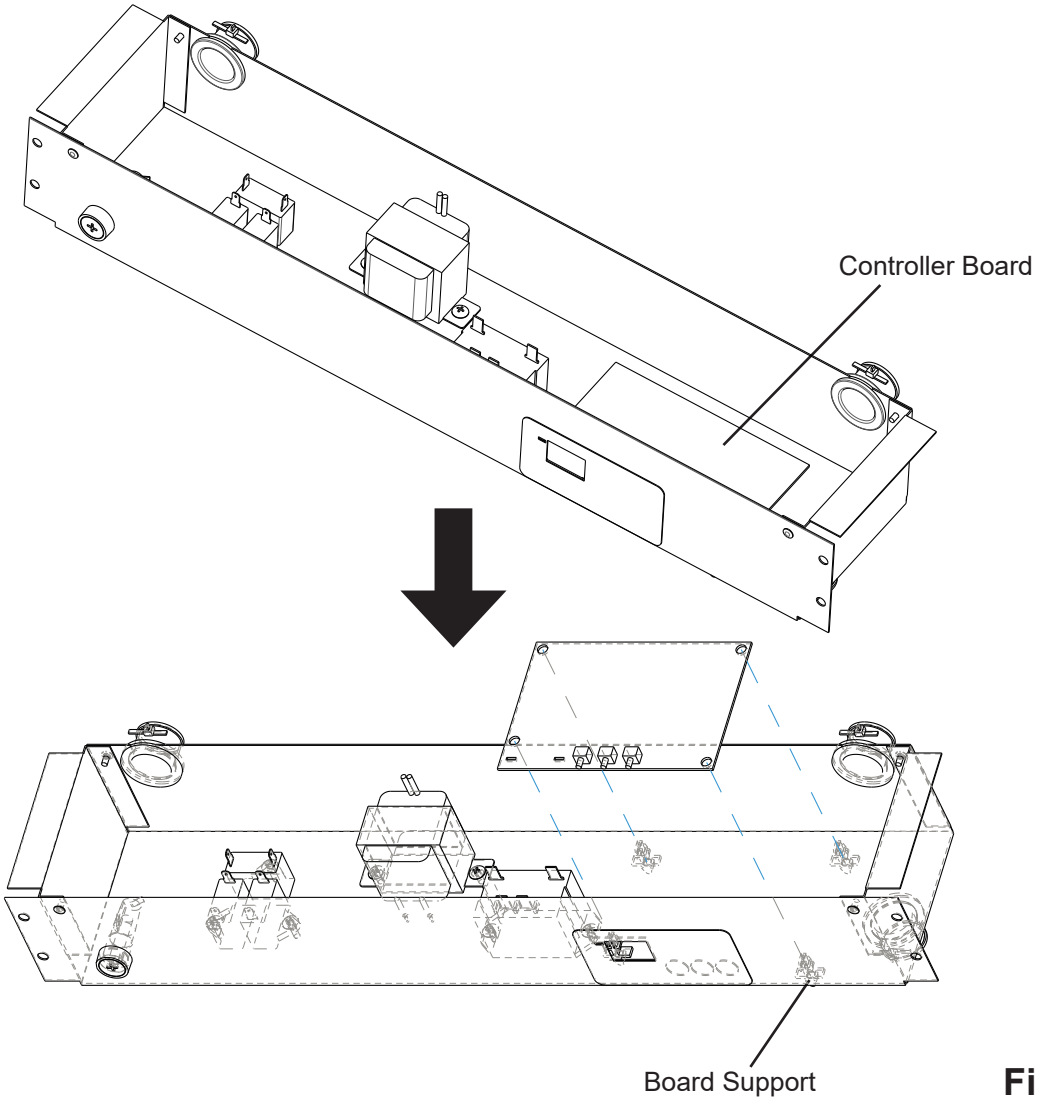

Fig. 11a

[IM-100A, IM-130A]

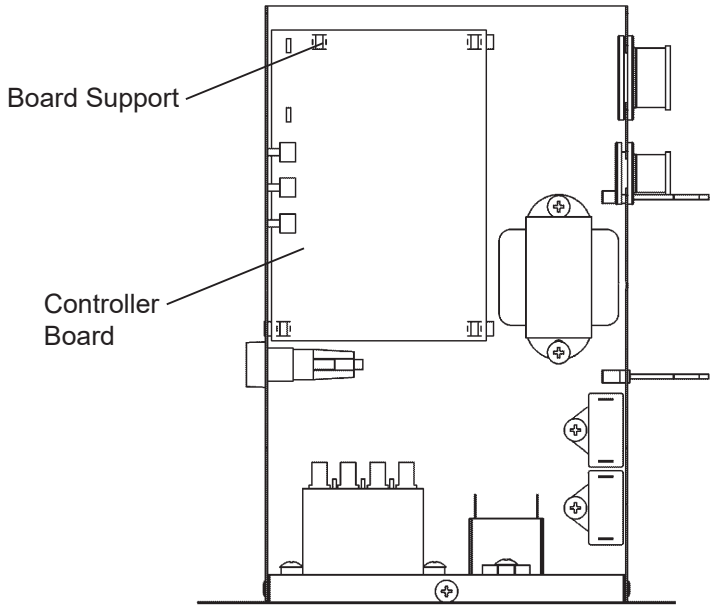

Fig. 11b

[IM-65A, IM-45CA]

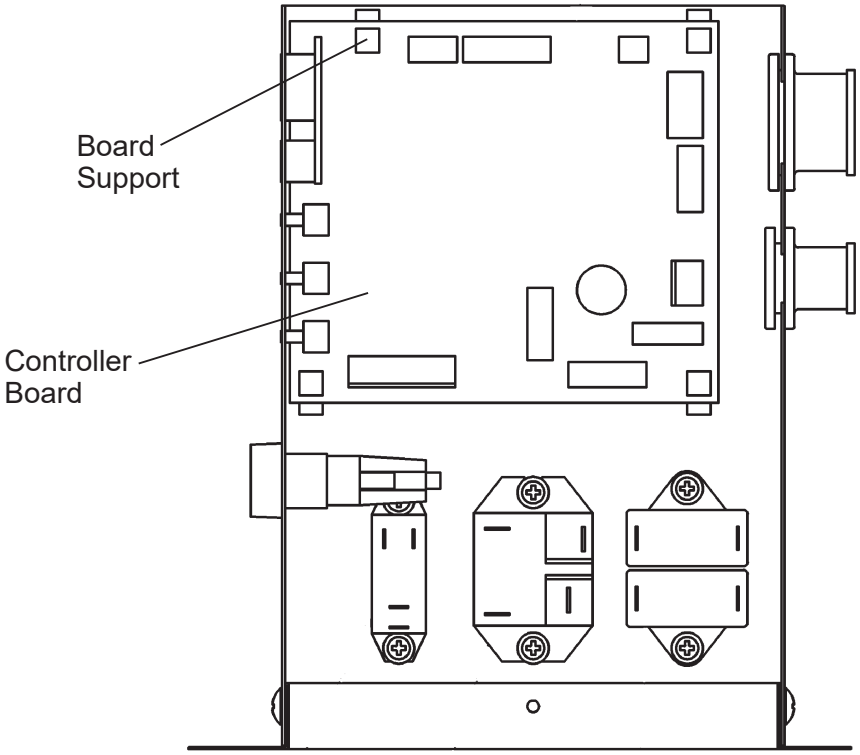

Fig. 11c

[IM-30CA]

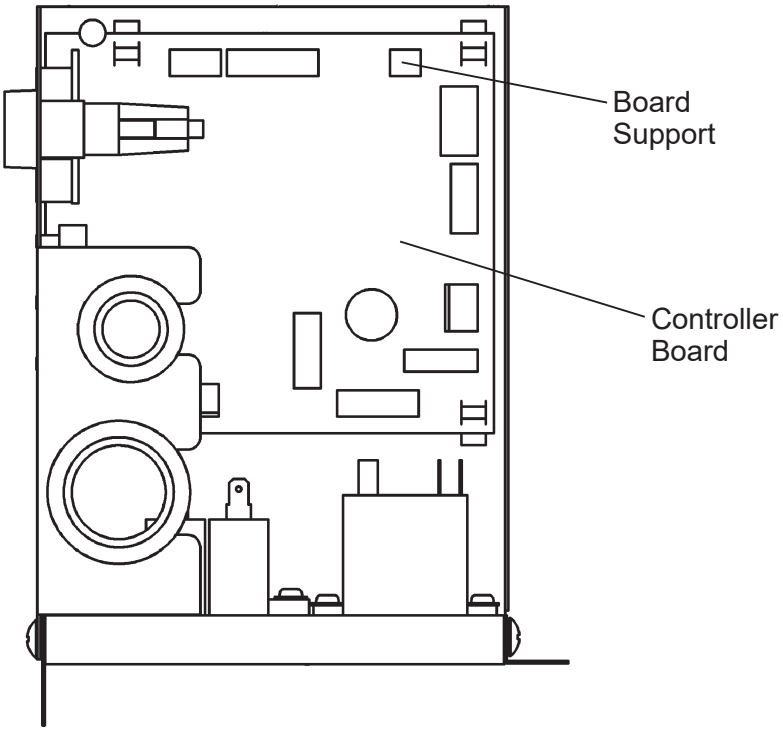

Fig. 11d

13. SWITCHING REGULATOR (IM-30CA, IM-45CA, IM-65A)

1) Unplug the icemaker or disconnect the power source.

2) Remove the louver. Unscrew and remove the regulator box cover.

3) Unscrew and remove the regulator box cover.

4) Disconnect all the connectors from the switching regulator.

5) Remove the switching regulator from the four board supports for connection to the regulator box.

6) Install the new switching regulator in the reverse order of the removal procedure.

7) Replace the louver in its correct position.

8) Plug in the icemaker or connect the power source.

[IM-65A, IM-45CA]

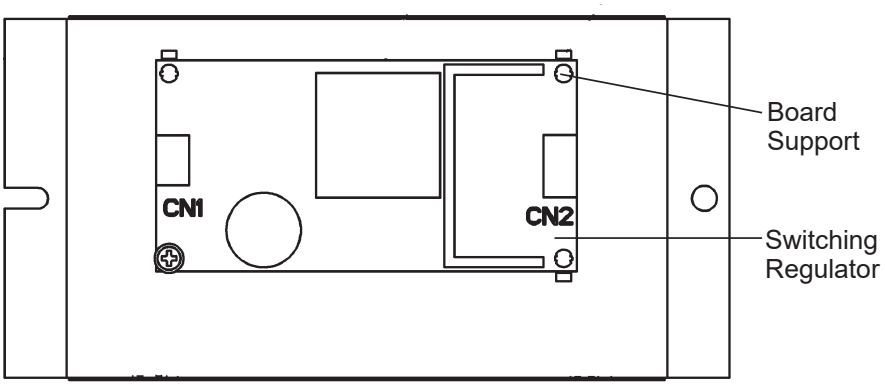

Fig. 12a

[IM-30CA]

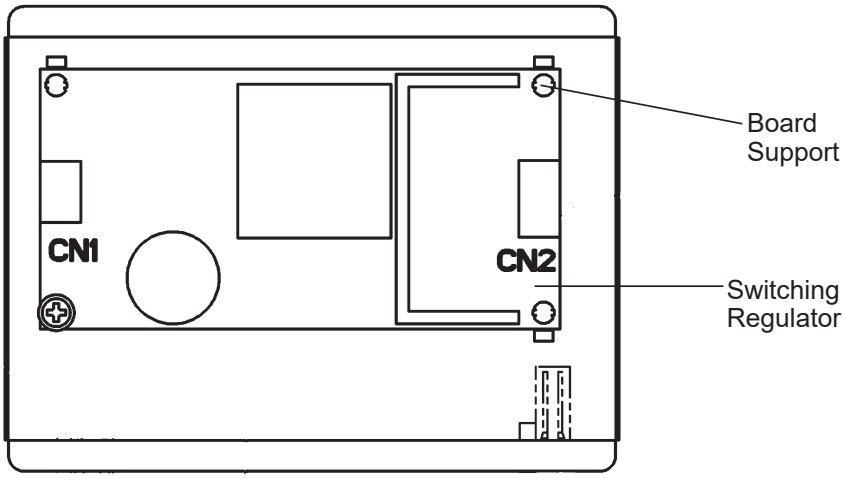

Fig. 12b

14. THERMISTOR FOR CUBE CONTROL

1) Unplug the icemaker or disconnect the power source.

2) Remove the top and front panels.

3) Remove the connector CN13 on the controller board, referring to “12. CONTROLLER BOARD”.

4) Unscrew and remove the thermistor holder and thermistor, located on the evaporator (front side).

5) Install the new thermistor in the reverse order of the removal procedure, by using a sealant (high-thermal conduct type). Fig. 13.

Note: Recommended sealant is KE4560RTV, manufactured by Shin-Etsu Silicones. When other type of sealant used, the cube size and performance will be changed. Do not use silicone sealant as this will insulate the thermistor.

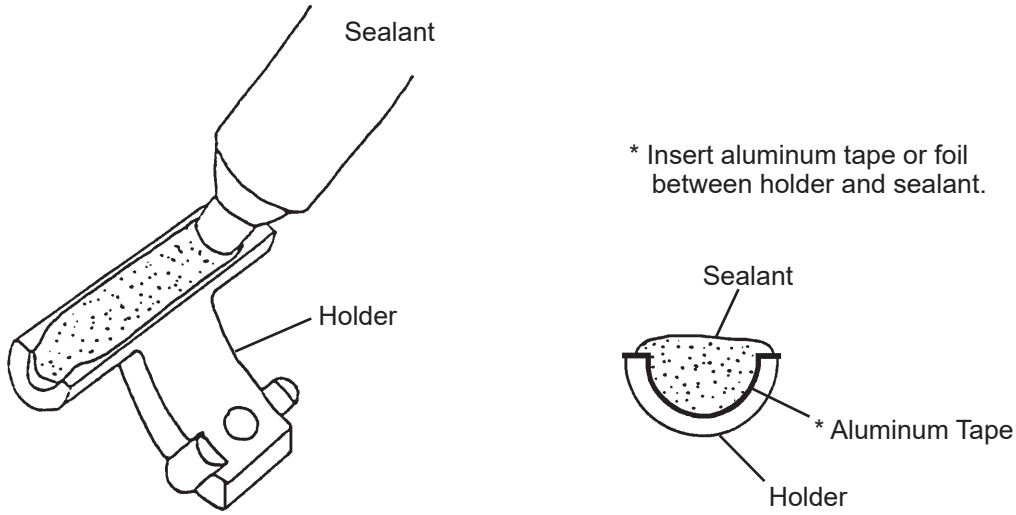

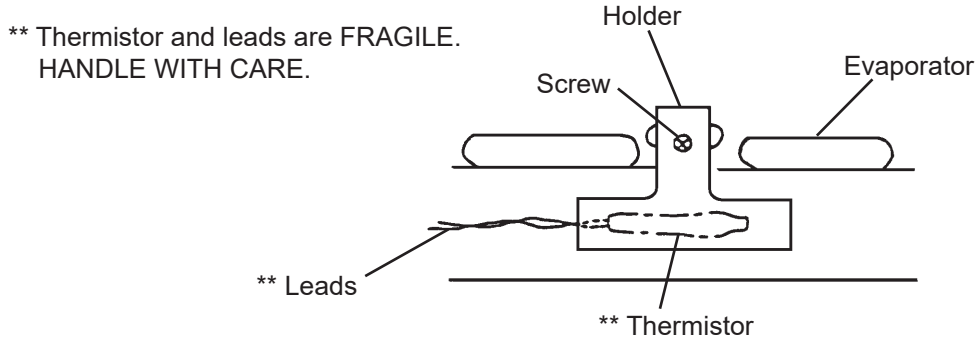

Fig. 13

15. FAN MOTOR

1) Unplug the icemaker or disconnect the power source.

2) Remove the top, front and both side panels.

3) Disconnect the connector of the fan motor.

4) Remove the fan motor bracket and the fan motor.

5) Cut the leads of the fan motor allowing enough lead length to reconnect using closed end connectors.

6) Install the new fan motor in the reverse order of the removal procedure.

7) Refit the panels in their correct positions.

8) Plug in the icemaker or connect the power source.

16. CONDENSER

[IM-45CA, IM-65A, IM-100A, IM-130A]

1) Unplug the icemaker or disconnect the power source.

2) Remove the two screws and the louver.

3) Recover the refrigerant.

4) Remove the two screws and slide the condenser to the side.

5) Once the refrigerant is fully recovered, check for remaining refrigerant around the condenser

6) Disconnect the condenser using brazing equipment.

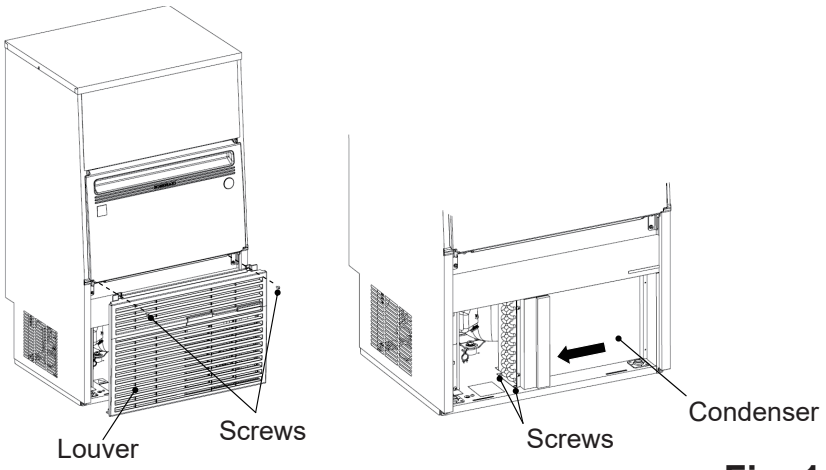

Fig. 14

[IM-30CA]

1) Unplug the icemaker or disconnect the power source.

2) Remove the two screws and the front panel.

3) Recover the refrigerant.

4) Remove the two screws securing the top panel and remove the top panel and insulation.

5) Remove the two screws and the pipe cover.

6) Remove the four screws and the rear cover.

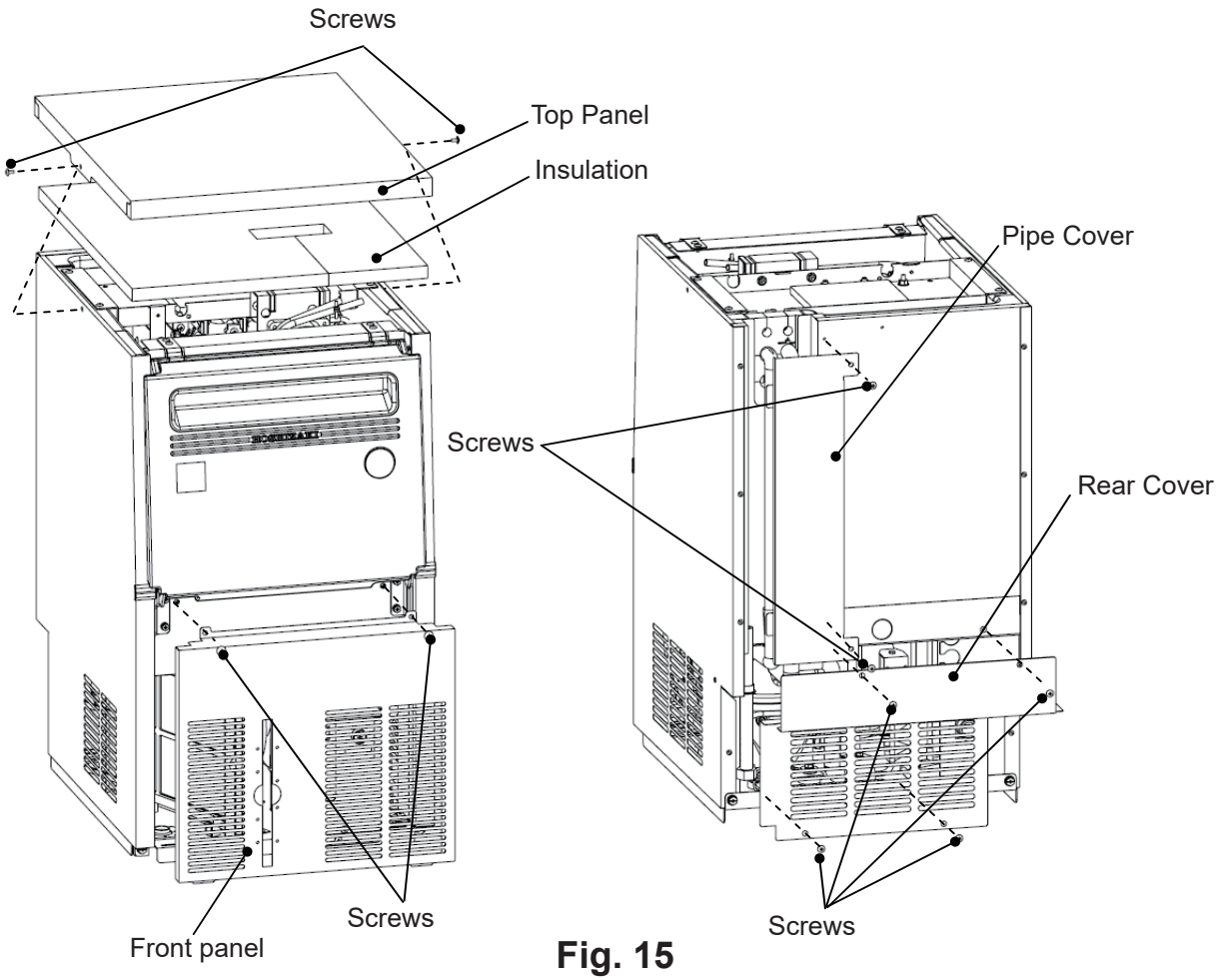

Fig. 15

7) Remove the four screws securing the mechanism base. Lift up and incline the evaporator backward.

Note: To follow the steps below, support the evaporator in the correct position to prevent the copper pipe connected to the evaporator from bending.

8) Remove the four screws securing the cabinet and remove the cabinet from the base.

9) Once the refrigerant is fully recovered, check for remaining refrigerant around the condenser

10) Disconnect the condenser using brazing equipment.

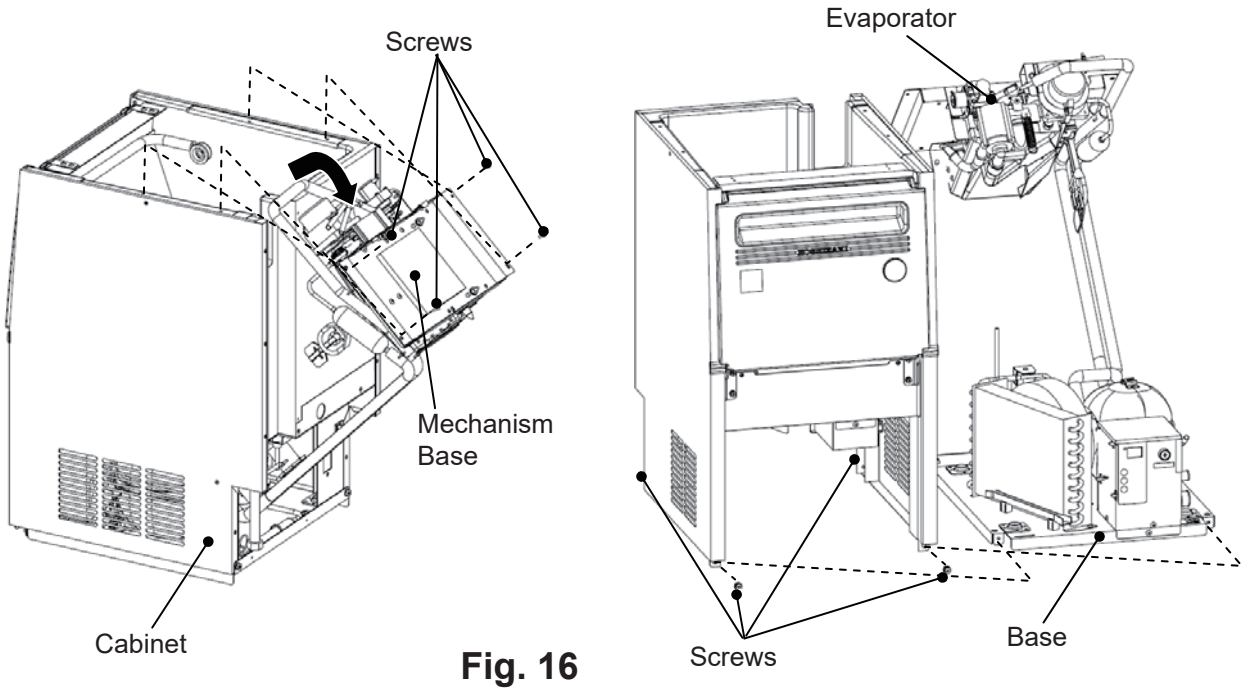

Fig. 16

17. WATER REGULATING VALVE - WATER-COOLED MODEL ONLY

[a] VALVE BODY

1) Unplug the icemaker or disconnect the power source.

2) Close the water supply tap.

3) Remove the front and rear panels.

4) Disconnect the flare connections of the water regulating valve.

5) Remove the valve from the bracket.

6) Install a new water regulating valve.

7) Connect the flare connections.

8) Open the water supply tap.

9) Check for water leaks.

10) Replace the panels in their correct positions.

11) Plug in the icemaker or connect the power source.

[b] WHOLE VALVE

IMPORTANT

Always install a new drier every time the sealed refrigeration system is opened. Do not replace the drier until after all other repair or replacement has been made.

1 Unplug the icemaker or disconnect the power source.

2) Close the water supply tap.

3) Remove the front and rear panels.

4) Recover the refrigerant and store it in a proper container, if required by an applicable law (See “1. [b] REFRIGERANT RECOVERY”).

5) Cut off the copper tube near the capillary tube solder connection, using a pipe cutter.

6) Cut off the capillary tubes of the valve and high-pressure switch, using a file and pliers. Be careful not to damage the capillary tube end.

7) Disconnect the flare connections from the bracket.

8) Remove the screws and the valve from the bracket.

9) Install the new valve, and insert the capillary tubes into the copper tube.

10) Web the copper tube end, and braze or solder the copper tube and capillary tubes together.

11) Install the new drier (See “3. DRIER”).

12) Check for leaks using nitrogen gas (10 bar) and soap bubbles.

13) Evacuate the system and charge it with refrigerant (See “1. [c] EVACUATION AND RECHARGE”).

14) Connect the flare connections.

15) Open the water supply tap.

16) Check for water leaks.

17) Replace the panels in their correct positions.

18) Plug in the icemaker or connect the power source.

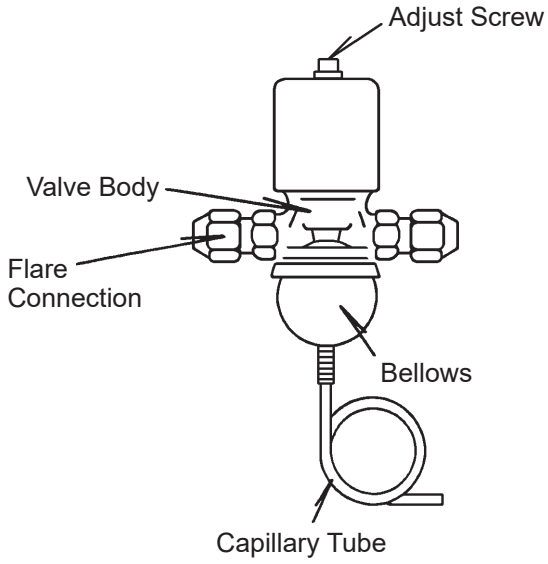

Fig. 17